Tournesol





2026 Price List

Products that elevate the spaces where landscape and architecture meet.



















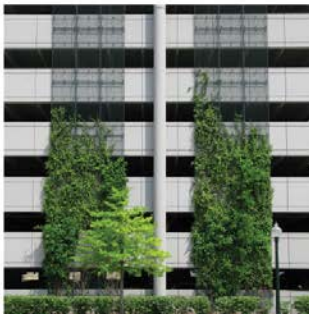

Prices listed do not include tax or freight; for a complete quote, submit a quote request by visiting Tournesol.com/requestquote. Pricing effective Oct.29.26

Table of Contents

POTS & PLANTERS

Standard Planter Options	4
Aloft Façade	6
Aquarian	7
Bioretention	8
Bolinas	9
Two-Tone Bolinas	10
Boulevard	11
Boulevard Planters with Greenscreen® Trellis	15
Boulevard Planters with Laser-Cut Screen	16
Laser-Cut Screen Information	17
Delta	18
Downtown	19
Florence	20
Harlie	22
Kitsap Modular Planter Walls	23
Montara Planters	24
Paso Planters	25
Urban Rectangle & Square	26
Urban Round	27
Two-Tone Urban Round	28
Wilshire Planters, Hanging Box	29
Wilshire Planters, Rectangle & Square	30
Wilshire Planters, Round	35
Two-Tone Wilshire Planters, Round with Toe kick	36
Wilshire Planters with Greenscreen® Trellis	37
Wilshire Planters with Laser-Cut Screen	38
Zena	39



GREENSCREEN®

Walls, Fencing, Infill & Columns	41

TABLES & BENCHES

Alpha	43
Camino	44
Montara Seating	46
Paso Seating	47
Pebble	48
Plaza	49
Rune	51
Transit	52
Twig Benches	54
Wally Benches	55
Willard Benches & Tables	56

BINS & BOLLARDS

Boulevard Bins & Recyclers	58
Plaza Receptacles	59
Tournesol Receptacles & Recyclers	60
Bollards	61

WATER FEATURES

Montara Water Features	67

ADDITIONAL PRODUCTS

Skirted Planter Saucers	69
Irrigation Inserts	71
Modular Container Irrigation	73
Drainage Control Products & Adapters	76
VersiCell	77
Custom Planter Liners	77

ADDITIONAL INFORMATION

Helpful Links	78

Tournesol





Pots & Planters









Prices listed do not include tax or freight; for a complete quote, submit a quote request by visiting Tournesol.com/requestquote. Pricing effective Oct.29.26

Tournesol

Standard Planter Options

Note that not all options are available for all products; we also have capabilities beyond the listed options. For something off-menu, speak to a Tournesol Advisor.



Drain Holes

Standard GFRC and Steel planters come with drain holes, but FRP planters come without. All our pots and planters are available with or without drainage holes, simply specify your choice.



Irrigation Systems

Tournesol's container irrigation systems are the best in the business, can fit any of our planters to reduce watering frequency..



Change in Dimension, Angled Length Modification

Don't see the size you're looking for? Many of our planters can be ordered with a change in one dimension as a standard option.



Accessory Pockets

Accommodate lighting, audio, power, and data. View our Fixture Compatibility Chart to use a Standard Accessory Pocket. Custom Accessory Pockets are available for fixtures not appearing on the compatibility chart.



Scoops

Square and rectangular planters can be connected end-to-end to create linear runs. "Scoops" lower adjacent planter walls, allowing them to hide beneath the soil surface, creating a continuous planting along the top.



Casters

Recessed casters discreetly provide mobility and are available for many of our planter collections. Planters receiving casters are built with reinforced raised bottoms, so that casters hide under skirted planter walls.



TourneSeal

Need it watertight? Specify TourneSeal, our waterproofing solution. This is highly recommended for planters that will not have drain holes.



Custom Color

Tournesol offers a broad range of standard colors for GFRC, FRP, and Powder-coat, but we also offer custom colors depending on product and volume. Contact a Tournesol Advisor to discuss your custom color needs.



Lift Channels

Moving large planters on the job site can be challenging. By adding lift channels, you can safely and quickly move planters on site. We have two configurations for lift channels: pallet jack or forklift.



Toe Kick

Planters with toe kicks (reveals) are available in several standard sizes. In addition, some products may be configured to add a toe kick, such as Wilshire Planters in Steel.



Tie Downs

Tie Downs are available to hold trees in place. These are available for planters in all our materials. Ties are added inside planters at the midpoint and are evenly distributed to keep the tree centered.



False Bottom

Reduce soil volume and weight in planters by adding false bottoms. False bottoms are 24" below the top of the planter unless otherwise specified. If other depth is needed, please contact your Advisor.



Bottom Reinforcement

When specifying FRP planters that won't have full basal support after installation, or planters that will be anchored to the underlying surface, bottom reinforcement is recommended.



Anchor Plate

Anchor plates are available for select planter applications. Speak to a Tournesol Advisor about specifying this option for your project.



Matching Saucer

Capture runoff from drain holes to prevent surface staining. Available in GFRC and FRP with matching finishes. See page 66 for more information.



Pre-Weathered Treatment

Tournesol's Pre-Weathered Steel Treatment creates a consistent weathered steel finish by accelerating the natural patina process. Contact a Tournesol Advisor for custom finish options.

Prices listed do not include tax or freight; for a complete quote, submit a quote request by visiting Tournesol.com/requestquote. Pricing effective Oct.29.26

Standard Planter Options

To simplify budgetary pricing, below are the standard markups for some of the frequently requested modifications to GFRC & FRP planters. Many of these same options are available for metal planters, some at no charge. For pricing for metal planters with modifications, please contact an Advisor. Note that not all options are available as standard for all products in all sizes. Charges listed below are for budgetary purposes only; each project is unique and will be quoted accordingly.

We can provide modifications and custom products beyond the list below, including modifications to site furnishings. Make an appointment with one of our Advisors to discuss your project needs.

Standard options apply to most FRP and GFRC Wilshire Collection planters. Because Metal planters are produced-to-order, many standard options are included at no charge. Speak with your Tournesol advisor for details.

The following services may be recommended for your project success:

SDR
Stamped calculations and drawings package by licensed professional engineer. Package remains the intellectual property of Tournesol Siteworks, LLC. Revisions may incur additional fees.

SPF
Charge for concept collaboration, shop drawings, and submittal package preparation for review prior to fabrication. Cost Includes one set of revisions.

PART NO.	DESCRIPTION	% OF PLANTER PRICE
SCP	FRP, GFRC, Wood - Scoop in planter sidewall, includes assembly hardware	20%
	Aluminum, Steel, Weathering Steel - Scoop in planter sidewall, includes assembly hardware	No Charge
DHC	Standard 1-5/8" Drain Hole Configurations	No Charge
DHCC	Custom Drain Hole Configurations	$40.00/hole
	Toe-kick option for Round Planters, all Materials - FRP, GFRC and Metal	15%
	Toe-kick option for Rectangle and Square Planters, all Materials - FRP, GFRC and Metal	5%
CAST	Caster modification	30%
SAP	Standard Accessory Pockets	$300
CAP	Custom Accessory Pockets	$600
FLC	Fork Lift Channels, includes bottom reinforcement	25%
PJC	Pallet Jack Channel, includes bottom reinforcement	25%
TSEAL	TourneSeal waterproofing applied to interior of FRP or GFRC pots	10%
BRF	3/4” plywood reinforcement cast into bottom of FRP planters	20%
BRF-AP	Anchor plate to spread load for bottom-reinforced planters (typically for Wally benches)	10%
WBAC	Planter angled length modification	20%
WBCC	Planter length modification	15%
FGCH	FRP planter height modification	15%
FCGCH	GFRC planter height modification	50%
FBT	False bottom cast into FRP planters	15%
PSC	Custom Finish Matching for GFRC, FRP, and Metal Products.	$750
TIE	Internal tie downs for round or square, 3 per round planter, 4 per square, one at each corner.	15%

Prices listed do not include tax or freight; for a complete quote, submit a quote request by visiting Tournesol.com/requestquote. Pricing effective Oct.29.26.

Aloft Façade Planters






PRODUCT	DESCRIPTION	LENGTH	WIDTH	HEIGHT	PRICE
AFC-301224	Aloft Façade Corner Planter with integral drainage and mounting frame	30" L	12" W	24" H	2220.00
AFR-481224	Aloft Façade Planter with integral drainage and mounting frame	48" L	12" W	24" H	1940.00
AFR-601224	Aloft Façade Planter with integral drainage and mounting frame	60" L	12" W	24" H	2240.00
AFR-721224	Aloft Façade Planter with integral drainage and mounting frame	72" L	12" W	24" H	2580.00
AFR-961224	Aloft Façade Planter with integral drainage and mounting frame	96" L	12" W	24" H	3160.00
AFC-331530	Aloft Façade Corner Planter with integral drainage and mounting frame	33" L	15" W	30" H	2580.00
AFR-481530	Aloft Façade Planter with integral drainage and mounting frame	48" L	15" W	30" H	2220.00
AFR-601530	Aloft Façade Planter with integral drainage and mounting frame	60" L	15" W	30" H	2690.00
AFR-721530	Aloft Façade Planter with integral drainage and mounting frame	72" L	15" W	30" H	2980.00
AFR-961530	Aloft Façade Planter with integral drainage and mounting frame	96" L	15" W	30" H	3710.00
AFC-361836	Aloft Façade Corner Planter with integral drainage and mounting frame	36" L	18" W	36" H	2920.00
AFR-481836	Aloft Façade Planter with integral drainage and mounting frame	48" L	18" W	36" H	2720.00
AFR-601836	Aloft Façade Planter with integral drainage and mounting frame	60" L	18" W	36" H	3210.00
AFR-721836	Aloft Façade Planter with integral drainage and mounting frame	72" L	18" W	36" H	3540.00
AFR-961836	Aloft Façade Planter with integral drainage and mounting frame	96" L	18" W	36" H	4160.00

PART NUMBER	DESCRIPTION	PRICE
AFR-GSB-BM	Greenscreen Bracket for mounting to bottom of planter - powder-coated	20.00
AFR-GSB-TM	Greenscreen Bracket for mounting to top of planter - powder-coated	20.00
AFR-ODT	Aloft Façade Drain Riser Kit, 30" - field cuttable	110.00

Prices listed do not include tax or freight; for a complete quote, submit a quote request by visiting Tournesol.com/requestquote. Pricing effective Oct.29.26.

Tournesol

Aquarian Collection



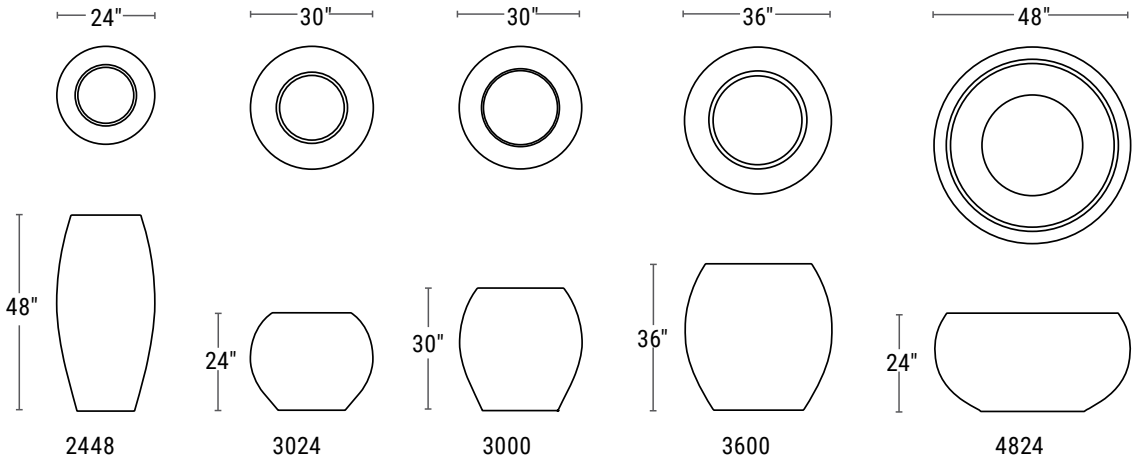

				MATERIALS	
				FRP	GFRC
PRODUCT	SHAPE	DIA.	HEIGHT	QS	QCS
QS/QCS-2448	Aquarian Round	24" Dia.	48"H	840.00	1030.00
QS/QCS-3030	Aquarian Round	30" Dia.	30"H	610.00	721.00
QS/QCS-3024	Aquarian Round	30" Dia.	24"H	480.00	670.00
QS/QCS-3636	Aquarian Round	36" Dia.	36"H	900.00	1154.00
QS/QCS-4824	Aquarian Round	48" Dia.	24"H	990.00	1216.00

Prices listed do not include tax or freight; for a complete quote, submit a quote request by visiting Tournesol.com/requestquote. Pricing effective Oct.29.26.

Bioretention Planters

Bioretention (flow-through) planters are on-structure organic filters for stormwater systems. Offered in several standard configurations (or custom designs); available in lightweight GFRC with an internal waterproof sealant and 4" dia. drainage plumbing.



					MATERIALS	
					GFRC	ALUMINUM
PRODUCT	DESCRIPTION	LENGTH	WIDTH	HEIGHT	WFT	WFT-AL
___-483642	Bioretention planter, drainage assembly supplied.	48"L	36"W	42"H	3519.00	3840.00
___-483648	Bioretention planter, drainage assembly supplied.	48"L	36"W	48"H	3876.00	4340.00
___-483654	Bioretention planter, drainage assembly supplied.	48"L	36"W	54"H	4274.00	4700.00
___-484842	Bioretention planter, drainage assembly supplied.	48"L	48"W	42"H	4060.00	4550.00
___-484848	Bioretention planter, drainage assembly supplied.	48"L	48"W	48"H	4284.00	4960.00
___-484854	Bioretention planter, drainage assembly supplied.	48"L	48"W	54"H	4784.00	5380.00
___-723642	Bioretention planter, drainage assembly supplied.	72"L	36"W	42"H	4335.00	5020.00
___-723648	Bioretention planter, drainage assembly supplied.	72"L	36"W	48"H	4814.00	5480.00
___-723654	Bioretention planter, drainage assembly supplied.	72"L	36"W	54"H	5284.00	5950.00
___-724842	Bioretention planter, drainage assembly supplied.	72"L	48"W	42"H	4927.00	5690.00
___-724848	Bioretention planter, drainage assembly supplied.	72"L	48"W	48"H	5284.00	6210.00
___-724854	Bioretention planter, drainage assembly supplied.	72"L	48"W	54"H	5845.00	6730.00
___-726042	Bioretention planter, drainage assembly supplied.	72"L	60"W	42"H	5365.00	6360.00
___-726048	Bioretention planter, drainage assembly supplied.	72"L	60"W	48"H	5671.00	6930.00
___-726054	Bioretention planter, drainage assembly supplied.	72"L	60"W	54"H	6579.00	7500.00
___-963642	Bioretention planter, drainage assembly supplied.	96"L	36"W	42"H	5151.00	6050.00
___-963648	Bioretention planter, drainage assembly supplied.	96"L	36"W	48"H	5610.00	6620.00
___-963654	Bioretention planter, drainage assembly supplied.	96"L	36"W	54"H	6293.00	7190.00
___-964842	Bioretention planter, drainage assembly supplied.	96"L	48"W	42"H	5794.00	6830.00
___-964848	Bioretention planter, drainage assembly supplied.	96"L	48"W	48"H	6130.00	7450.00
___-964854	Bioretention planter, drainage assembly supplied.	96"L	48"W	54"H	6834.00	8070.00
___-966042	Bioretention planter, drainage assembly supplied.	96"L	60"W	42"H	6273.00	7610.00
___-966048	Bioretention planter, drainage assembly supplied.	96"L	60"W	48"H	6640.00	8280.00
___-966054	Bioretention planter, drainage assembly supplied.	96"L	60"W	54"H	7609.00	8960.00

PRODUCT	DESCRIPTION	PRICE, EA.
WFT-SB-18	Bioretention accessory, Splash box, Stainless Steel, 18" SQ	989.00
WFT-SB-24	Bioretention accessory, Splash box, Stainless Steel, 24" SQ	1244.00
WFT-LS-48	Bioretention accessory, Level spreader, Stainless Steel, 48"L	255.00
WFT-LS-60	Bioretention accessory, Level spreader, Stainless Steel, 60"L	275.00
WFT-LS-72	Bioretention accessory, Level spreader, Stainless Steel, 72"L	296.00

Prices listed do not include tax or freight; for a complete quote, submit a quote request by visiting Tournesol.com/requestquote. Pricing effective Oct.29.26.

Tournesol

Bolinas

Bold, sculptural, monumental concrete planter forms inspired by the rugged coastline of Northern California with a nod to Brutalism.



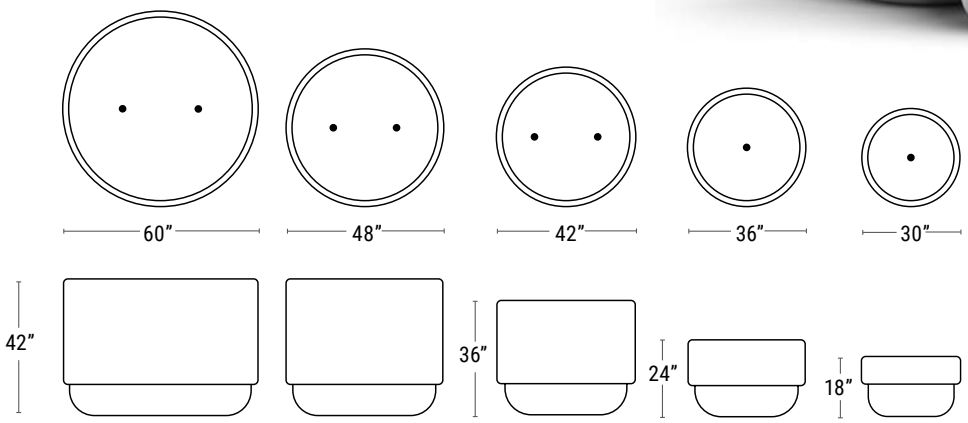

PRODUCT	DESCRIPTION	DIA.	HEIGHT	FRP	GFRC
BA/BCA-3018	Bolinas Planter	30" Dia.	18"H	430.00	521.00
BA/BCA-3024	Bolinas Planter	30" Dia.	24"H	520.00	633.00
BA/BCA-3036	Bolinas Planter	30" Dia.	36"H	700.00	847.00
BA/BCA-3042	Bolinas Planter	30" Dia.	42"H	780.00	949.00
BA/BCA-3054	Bolinas Planter	30" Dia.	54"H	1190.00	1061.00
BA/BCA-3618	Bolinas Planter	36" Dia.	18"H	610.00	735.00
BA/BCA-3624	Bolinas Planter	36" Dia.	24"H	610.00	888.00
BA/BCA-3636	Bolinas Planter	36" Dia.	36"H	940.00	1143.00
BA/BCA-3642	Bolinas Planter	36" Dia.	42"H	1160.00	1347.00
BA/BCA-3654	Bolinas Planter	36" Dia.	54"H	1430.00	1653.00
BA/BCA-4224	Bolinas Planter	42" Dia.	24"H	910.00	1102.00
BA/BCA-4236	Bolinas Planter	42" Dia.	36"H	1260.00	1459.00
BA/BCA-4242	Bolinas Planter	42" Dia.	42"H	1410.00	1632.00
BA/BCA-4824	Bolinas Planter	48" Dia.	24"H	1190.00	1439.00
BA/BCA-4836	Bolinas Planter	48" Dia.	36"H	1620.00	1877.00
BA/BCA-4842	Bolinas Planter	48" Dia.	42"H	1810.00	2102.00
BA/BCA-6024	Bolinas Planter	60" Dia.	24"H	1610.00	1867.00
BA/BCA-6036	Bolinas Planter	60" Dia.	36"H	2090.00	2428.00
BA/BCA-6042	Bolinas Planter	60" Dia.	42"H	2280.00	2642.00

Prices listed do not include tax or freight; for a complete quote, submit a quote request by visiting Tournesol.com/requestquote. Pricing effective Oct.29.26.

Tournesol

Two-Tone Bolinas



Bold, sculptural, monumental concrete planter forms inspired by the rugged coastline of Northern California with a nod to Brutalism.

Lightweight GFRC planters in Chalk Sandblast, with one of six Natural Sand colors.

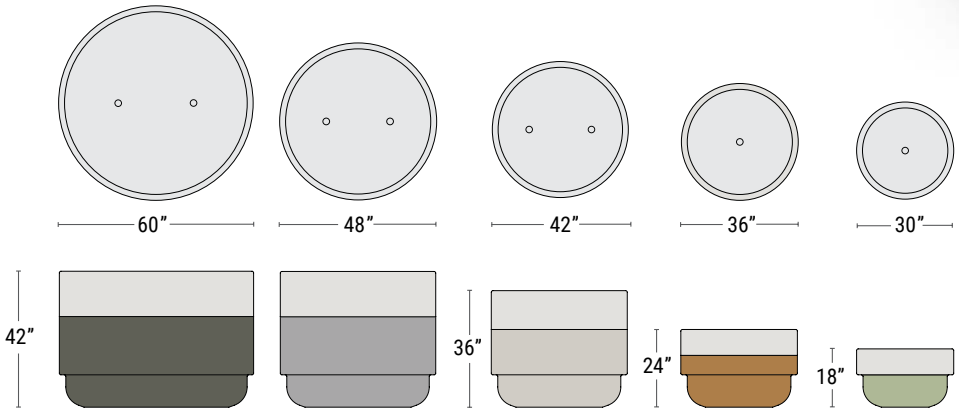

PRODUCT	DESCRIPTION	DIA.	HEIGHT	GFRC
TTF-BCA-3018	Two-Tone Bolinas Planter	30"	18"	602.00
TTF-BCA-3024	Two-Tone Bolinas Planter	30"	24"	734.00
TTF-BCA-3036	Two-Tone Bolinas Planter	30"	36"	979.00
TTF-BCA-3042	Two-Tone Bolinas Planter	30"	42"	1091.00
TTF-BCA-3054	Two-Tone Bolinas Planter	30"	54"	1224.00
TTF-BCA-3618	Two-Tone Bolinas Planter	36"	18"	602.00
TTF-BCA-3624	Two-Tone Bolinas Planter	36"	24"	1030.00
TTF-BCA-3636	Two-Tone Bolinas Planter	36"	36"	1316.00
TTF-BCA-3642	Two-Tone Bolinas Planter	36"	42"	1550.00
TTF-BCA-3654	Two-Tone Bolinas Planter	36"	54"	1907.00
TTF-BCA-4224	Two-Tone Bolinas Planter	42"	24"	1275.00
TTF-BCA-4236	Two-Tone Bolinas Planter	42"	36"	1683.00
TTF-BCA-4242	Two-Tone Bolinas Planter	42"	42"	1877.00
TTF-BCA-4824	Two-Tone Bolinas Planter	48"	24"	1663.00
TTF-BCA-4836	Two-Tone Bolinas Planter	48"	36"	2162.00
TTF-BCA-4842	Two-Tone Bolinas Planter	48"	42"	2417.00
TTF-BCA-6024	Two-Tone Bolinas Planter	60"	24"	2152.00
TTF-BCA-6036	Two-Tone Bolinas Planter	60"	36"	2795.00
TTF-BCA-6042	Two-Tone Bolinas Planter	60"	42"	3040.00

Prices listed do not include tax or freight; for a complete quote, submit a quote request by visiting Tournesol.com/requestquote. Pricing effective Oct.29.26.

Tournesol

Boulevard Planters



Boulevard commercial-grade planters combine the durability of fiberglass with the warmth of wood. A fiberglass liner keeps moisture from soil, ground, and irrigation away from the cladding, extending the life and beauty of the wood surfaces.

CLADDING

When selecting cladding options for your planters, you should specify cladding to cover visible sides. Opting for less than 4-sided cladding will reduce your planter dimensions.

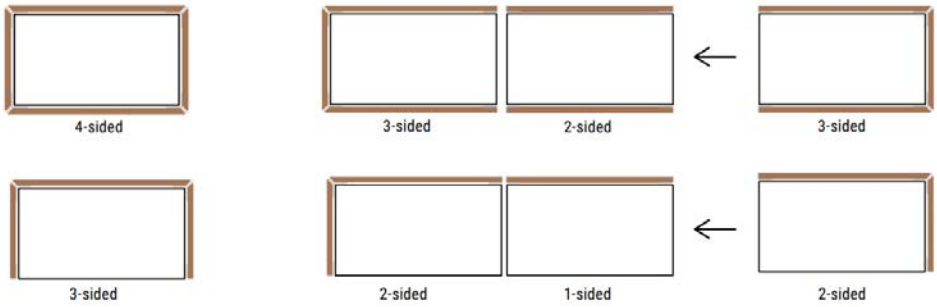



Corner with adjacent cladding



Corner without adjacent cladding

Pricing shown based on Thermally Modified Wood. When specifying, replace the '-X' with '-4', '-3', '-2', or '-1' to indicate choice of 4, 3, 2, or 1 sided cladding.

PRODUCT	SHAPE	DESCRIPTION	LENGTH	WIDTH	HEIGHT	4 SIDES (-4)	3 SIDES (-3)	2 SIDES (-2)	1 SIDE (-1)
BV-181824-X	Square	Boulevard FRP Planter with wood cladding	18"L	18"W	24"H	1345.00	1289.00	1137.00	802.00
BV-181836-X	Tall Square	Boulevard FRP Planter with wood cladding	18"L	18"W	35"H	1756.00	1614.00	1421.00	1015.00
BV-241236-X	Rectangle	Boulevard FRP Planter with wood cladding	24"L	12"W	36"H	1756.00	1644.00	1441.00	1035.00
BV-241818-X	Rectangle	Boulevard FRP Planter with wood cladding	24"L	18"W	18"H	1411.00	1198.00	1056.00	751.00
BV-241824-X	Rectangle	Boulevard FRP Planter with wood cladding	24"L	18"W	24"H	1634.00	1411.00	1238.00	883.00
BV-241830-X	Rectangle	Boulevard FRP Planter with wood cladding	24"L	18"W	30"H	1827.00	1614.00	1421.00	1015.00
BV-241836-X	Rectangle	Boulevard FRP Planter with wood cladding	24"L	18"W	36"H	1893.00	1817.00	1604.00	1157.00
BV-242424-X	Square	Boulevard FRP Planter with wood cladding	24"L	24"W	24"H	1624.00	1523.00	1340.00	964.00
BV-242442-X	Tall Square	Boulevard FRP Planter with wood cladding	24"L	24"W	41"H	2385.00	2192.00	1929.00	1401.00
BV-361236-X	Rectangle	Boulevard FRP Planter with wood cladding	36"L	12"W	36"H	2172.00	2000.00	1756.00	1269.00
BV-361818-X	Rectangle	Boulevard FRP Planter with wood cladding	36"L	18"W	18"H	1604.00	1380.00	1208.00	863.00
BV-361824-X	Rectangle	Boulevard FRP Planter with wood cladding	36"L	18"W	24"H	1898.00	1644.00	1441.00	1035.00
BV-361830-X	Rectangle	Boulevard FRP Planter with wood cladding	36"L	18"W	30"H	2182.00	1908.00	1675.00	1208.00
BV-361836-X	Rectangle	Boulevard FRP Planter with wood cladding	36"L	18"W	36"H	2274.00	2172.00	1908.00	1380.00
BV-362418-X	Rectangle	Boulevard FRP Planter with wood cladding	36"L	24"W	18"H	1705.00	1462.00	1289.00	924.00
BV-362424-X	Rectangle	Boulevard FRP Planter with wood cladding	36"L	24"W	24"H	1959.00	1756.00	1543.00	1117.00

Prices listed do not include tax or freight; for a complete quote, submit a quote request by visiting Tournesol.com/requestquote. Pricing effective Oct.29.26.

Boulevard Planters

Pricing shown based on Thermally Modified Wood. When specifying, replace the '-X' with '-4', '-3', '-2', or '-1' to indicate choice of 4, 3, 2, or 1 sided cladding.

PRODUCT	SHAPE	DESCRIPTION	LENGTH	WIDTH	HEIGHT	4 SIDES (-4)	3 SIDES (-3)	2 SIDES (-2)	1 SIDE (-1)
BV-362430-X	Rectangle	Boulevard FRP Planter with wood cladding	36"L	24"W	30"H	2345.00	2050.00	1807.00	1309.00
BV-362436-X	Rectangle	Boulevard FRP Planter with wood cladding	36"L	24"W	36"H	2659.00	2345.00	2060.00	1502.00
BV-362442-X	Rectangle	Boulevard FRP Planter with wood cladding	36"L	24"W	42"H	2984.00	2639.00	2324.00	1695.00
BV-363018-X	Rectangle	Boulevard FRP Planter with wood cladding	36"L	30"W	18"H	1797.00	1553.00	1370.00	974.00
BV-363024-X	Rectangle	Boulevard FRP Planter with wood cladding	36"L	30"W	24"H	2152.00	1878.00	1654.00	1188.00
BV-363030-X	Rectangle	Boulevard FRP Planter with wood cladding	36"L	30"W	30"H	2497.00	2203.00	1939.00	1401.00
BV-363042-X	Rectangle	Boulevard FRP Planter with wood cladding	36"L	30"W	42"H	3207.00	2852.00	2507.00	1827.00
BV-363618-X	Rectangle	Boulevard FRP Planter with wood cladding	36"L	36"W	18"H	1898.00	1644.00	1441.00	1035.00
BV-363624-X	Rectangle	Boulevard FRP Planter with wood cladding	36"L	36"W	24"H	2274.00	2000.00	1756.00	1269.00
BV-363630-X	Square	Boulevard FRP Planter with wood cladding	36"L	36"W	30"H	2659.00	2345.00	2060.00	1502.00
BV-363642-X	Rectangle	Boulevard FRP Planter with wood cladding	36"L	36"W	42"H	3431.00	3055.00	2690.00	1959.00
BV-481236-X	Rectangle	Boulevard FRP Planter with wood cladding	48"L	12"W	36"H	2659.00	2345.00	2060.00	1502.00
BV-481818-X	Rectangle	Boulevard FRP Planter with wood cladding	48"L	18"W	18"H	1797.00	1553.00	1370.00	974.00
BV-481824-X	Rectangle	Boulevard FRP Planter with wood cladding	48"L	18"W	24"H	2152.00	1878.00	1654.00	1188.00
BV-481830-X	Rectangle	Boulevard FRP Planter with wood cladding	48"L	18"W	30"H	2497.00	2203.00	1939.00	1401.00
BV-481836-X	Rectangle	Boulevard FRP Planter with wood cladding	48"L	18"W	36"H	2751.00	2527.00	2223.00	1614.00
BV-482418-X	Rectangle	Boulevard FRP Planter with wood cladding	48"L	24"W	18"H	1898.00	1644.00	1441.00	1035.00
BV-482424-X	Rectangle	Boulevard FRP Planter with wood cladding	48"L	24"W	24"H	2274.00	2000.00	1756.00	1269.00
BV-482430-X	Rectangle	Boulevard FRP Planter with wood cladding	48"L	24"W	30"H	2659.00	2345.00	2060.00	1502.00
BV-482436-X	Rectangle	Boulevard FRP Planter with wood cladding	48"L	24"W	36"H	3045.00	2700.00	2375.00	1736.00
BV-482442-X	Rectangle	Boulevard FRP Planter with wood cladding	48"L	24"W	42"H	3431.00	3055.00	2690.00	1959.00
BV-483018-X	Rectangle	Boulevard FRP Planter with wood cladding	48"L	30"W	18"H	1989.00	1726.00	1523.00	1096.00
BV-483024-X	Rectangle	Boulevard FRP Planter with wood cladding	48"L	30"W	24"H	2406.00	2111.00	1857.00	1350.00
BV-483030-X	Rectangle	Boulevard FRP Planter with wood cladding	48"L	30"W	30"H	2822.00	2497.00	2192.00	1594.00
BV-483042-X	Rectangle	Boulevard FRP Planter with wood cladding	48"L	30"W	42"H	3654.00	3258.00	2872.00	2101.00
BV-483618-X	Rectangle	Boulevard FRP Planter with wood cladding	48"L	36"W	18"H	2081.00	1817.00	1604.00	1157.00
BV-483624-X	Rectangle	Boulevard FRP Planter with wood cladding	48"L	36"W	24"H	2538.00	2233.00	1959.00	1421.00
BV-483630-X	Rectangle	Boulevard FRP Planter with wood cladding	48"L	36"W	30"H	2984.00	2639.00	2324.00	1695.00
BV-483636-X	Rectangle	Boulevard FRP Planter with wood cladding	48"L	36"W	36"H	3431.00	3055.00	2690.00	1959.00
BV-483642-X	Rectangle	Boulevard FRP Planter with wood cladding	48"L	36"W	42"H	3877.00	3471.00	3045.00	2233.00
BV-484836-X	Square	Boulevard FRP Planter with wood cladding	48"L	48"W	36"H	3725.00	3329.00	2923.00	2142.00
BV-601236-X	Rectangle	Boulevard FRP Planter with wood cladding	60"L	12"W	36"H	2893.00	2700.00	2375.00	1736.00
BV-601818-X	Rectangle	Boulevard FRP Planter with wood cladding	60"L	18"W	18"H	1989.00	1726.00	1523.00	1096.00
BV-601824-X	Rectangle	Boulevard FRP Planter with wood cladding	60"L	18"W	24"H	2406.00	2111.00	1857.00	1350.00
BV-601830-X	Rectangle	Boulevard FRP Planter with wood cladding	60"L	18"W	30"H	2822.00	2497.00	2192.00	1594.00
BV-601836-X	Rectangle	Boulevard FRP Planter with wood cladding	60"L	18"W	36"H	3035.00	2883.00	2527.00	1847.00
BV-602418-X	Rectangle	Boulevard FRP Planter with wood cladding	60"L	24"W	18"H	2081.00	1939.00	1604.00	1157.00
BV-602424-X	Rectangle	Boulevard FRP Planter with wood cladding	60"L	24"W	24"H	2538.00	2233.00	1959.00	1421.00
BV-602430-X	Rectangle	Boulevard FRP Planter with wood cladding	60"L	24"W	30"H	2984.00	2639.00	2324.00	1695.00
BV-602436-X	Rectangle	Boulevard FRP Planter with wood cladding	60"L	24"W	36"H	3431.00	3055.00	2690.00	1959.00

Prices listed do not include tax or freight; for a complete quote, submit a quote request by visiting Tournesol.com/requestquote. Pricing effective Oct.29.26.

Boulevard Planters

Pricing shown based on Thermally Modified Wood. When specifying, replace the '-X' with '-4', '-3', '-2', or '-1' to indicate choice of 4, 3, 2, or 1 sided cladding.

PRODUCT	SHAPE	DESCRIPTION	LENGTH	WIDTH	HEIGHT	4 SIDES (-4)	3 SIDES (-3)	2 SIDES (-2)	1 SIDE (-1)
BV-602442-X	Rectangle	Boulevard FRP Planter with wood cladding	60"L	24"W	42"H	3877.00	3471.00	3045.00	2233.00
BV-603018-X	Rectangle	Boulevard FRP Planter with wood cladding	60"L	30"W	18"H	2182.00	1908.00	1675.00	1208.00
BV-603024-X	Rectangle	Boulevard FRP Planter with wood cladding	60"L	30"W	24"H	2659.00	2345.00	2060.00	1502.00
BV-603030-X	Rectangle	Boulevard FRP Planter with wood cladding	60"L	30"W	30"H	3136.00	2791.00	2456.00	1786.00
BV-603036-X	Rectangle	Boulevard FRP Planter with wood cladding	60"L	30"W	36"H	3624.00	3228.00	2842.00	2081.00
BV-603042-X	Rectangle	Boulevard FRP Planter with wood cladding	60"L	30"W	42"H	4101.00	3674.00	3228.00	2365.00
BV-603618-X	Rectangle	Boulevard FRP Planter with wood cladding	60"L	36"W	18"H	2274.00	2000.00	1756.00	1269.00
BV-603624-X	Rectangle	Boulevard FRP Planter with wood cladding	60"L	36"W	24"H	2791.00	2466.00	2172.00	1573.00
BV-603630-X	Rectangle	Boulevard FRP Planter with wood cladding	60"L	36"W	30"H	3299.00	2933.00	2578.00	1888.00
BV-603636-X	Rectangle	Boulevard FRP Planter with wood cladding	60"L	36"W	36"H	3816.00	3410.00	2994.00	2192.00
BV-603642-X	Rectangle	Boulevard FRP Planter with wood cladding	60"L	36"W	36"H	4547.00	4080.00	3593.00	2639.00
BV-606042-X	Square	Boulevard FRP Planter with wood cladding	60"L	60"W	41"H	5116.00	4608.00	4050.00	2974.00
BV-721236-X	Rectangle	Boulevard FRP Planter with wood cladding	72"L	12"W	36"H	3045.00	2700.00	2375.00	1736.00
BV-721818-X	Rectangle	Boulevard FRP Planter with wood cladding	72"L	18"W	18"H	2182.00	1908.00	1675.00	1208.00
BV-721824-X	Rectangle	Boulevard FRP Planter with wood cladding	72"L	18"W	24"H	2659.00	2345.00	2060.00	1502.00
BV-721830-X	Rectangle	Boulevard FRP Planter with wood cladding	72"L	18"W	30"H	3136.00	2791.00	2456.00	1786.00
BV-721836-X	Rectangle	Boulevard FRP Planter with wood cladding	72"L	18"W	36"H	3624.00	3228.00	2842.00	2081.00
BV-722418-X	Rectangle	Boulevard FRP Planter with wood cladding	72"L	24"W	18"H	2274.00	2000.00	1756.00	1269.00
BV-722424-X	Rectangle	Boulevard FRP Planter with wood cladding	72"L	24"W	24"H	2791.00	2466.00	2172.00	1573.00
BV-722430-X	Rectangle	Boulevard FRP Planter with wood cladding	72"L	24"W	30"H	3299.00	2933.00	2578.00	1888.00
BV-722436-X	Rectangle	Boulevard FRP Planter with wood cladding	72"L	24"W	36"H	3816.00	3410.00	2994.00	2192.00
BV-722442-X	Rectangle	Boulevard FRP Planter with wood cladding	72"L	24"W	42"H	4324.00	3877.00	3410.00	2507.00
BV-723018-X	Rectangle	Boulevard FRP Planter with wood cladding	72"L	30"W	18"H	2375.00	2081.00	1837.00	1330.00
BV-723024-X	Rectangle	Boulevard FRP Planter with wood cladding	72"L	30"W	24"H	2913.00	2588.00	2274.00	1654.00
BV-723030-X	Rectangle	Boulevard FRP Planter with wood cladding	72"L	30"W	30"H	3461.00	3086.00	2710.00	1979.00
BV-723036-X	Rectangle	Boulevard FRP Planter with wood cladding	72"L	30"W	36"H	3999.00	3583.00	3157.00	2314.00
BV-723042-X	Rectangle	Boulevard FRP Planter with wood cladding	72"L	30"W	42"H	4547.00	4080.00	3593.00	2639.00
BV-723618-X	Rectangle	Boulevard FRP Planter with wood cladding	72"L	36"W	18"H	2466.00	2172.00	1908.00	1380.00
BV-723624-X	Rectangle	Boulevard FRP Planter with wood cladding	72"L	36"W	24"H	3045.00	2700.00	2375.00	1736.00
BV-723630-X	Rectangle	Boulevard FRP Planter with wood cladding	72"L	36"W	30"H	3624.00	3228.00	2842.00	2081.00
BV-723636-X	Rectangle	Boulevard FRP Planter with wood cladding	72"L	36"W	36"H	4192.00	3766.00	3309.00	2426.00
BV-723642-X	Rectangle	Boulevard FRP Planter with wood cladding	72"L	36"W	42"H	4771.00	4293.00	3776.00	2771.00
BV-961236-X	Rectangle	Boulevard FRP Planter with wood cladding	96"L	12"W	36"H	4192.00	3766.00	3309.00	2426.00
BV-961818-X	Rectangle	Boulevard FRP Planter with wood cladding	96"L	18"W	18"H	2568.00	2263.00	1989.00	1441.00
BV-961824-X	Rectangle	Boulevard FRP Planter with wood cladding	96"L	18"W	24"H	3177.00	2822.00	2477.00	1807.00
BV-961830-X	Rectangle	Boulevard FRP Planter with wood cladding	96"L	18"W	30"H	3776.00	3380.00	2974.00	2172.00
BV-961836-X	Rectangle	Boulevard FRP Planter with wood cladding	96"L	18"W	36"H	4385.00	3938.00	3461.00	2538.00
BV-962418-X	Rectangle	Boulevard FRP Planter with wood cladding	96"L	24"W	18"H	2659.00	2345.00	2060.00	1502.00
BV-962424-X	Rectangle	Boulevard FRP Planter with wood cladding	96"L	24"W	24"H	3299.00	2933.00	2578.00	1888.00
BV-962430-X	Rectangle	Boulevard FRP Planter with wood cladding	96"L	24"W	30"H	3938.00	3522.00	3096.00	2274.00

Prices listed do not include tax or freight; for a complete quote, submit a quote request by visiting Tournesol.com/requestquote. Pricing effective Oct.29.26.

Boulevard Planters

Pricing shown based on Thermally Modified Wood. When specifying, replace the '-X' with '-4', '-3', '-2', or '-1' to indicate choice of 4, 3, 2, or 1 sided cladding.

PRODUCT	SHAPE	DESCRIPTION	LENGTH	WIDTH	HEIGHT	4 SIDES (-4)	3 SIDES (-3)	2 SIDES (-2)	1 SIDE (-1)
BV-962436-X	Rectangle	Boulevard FRP Planter with wood cladding	96"L	24"W	36"H	4578.00	4111.00	3613.00	2659.00
BV-962442-X	Rectangle	Boulevard FRP Planter with wood cladding	96"L	24"W	42"H	5217.00	4699.00	4131.00	3045.00
BV-963018-X	Rectangle	Boulevard FRP Planter with wood cladding	96"L	30"W	18"H	2761.00	2436.00	2142.00	1553.00
BV-963024-X	Rectangle	Boulevard FRP Planter with wood cladding	96"L	30"W	24"H	3431.00	3055.00	2690.00	1959.00
BV-963030-X	Rectangle	Boulevard FRP Planter with wood cladding	96"L	30"W	30"H	4101.00	3674.00	3228.00	2365.00
BV-963042-X	Rectangle	Boulevard FRP Planter with wood cladding	96"L	30"W	42"H	5440.00	4913.00	4314.00	3177.00
BV-963618-X	Rectangle	Boulevard FRP Planter with wood cladding	96"L	36"W	18"H	2852.00	2527.00	2223.00	1614.00
BV-963624-X	Rectangle	Boulevard FRP Planter with wood cladding	96"L	36"W	24"H	3553.00	3177.00	2791.00	2040.00
BV-963630-X	Rectangle	Boulevard FRP Planter with wood cladding	96"L	36"W	30"H	4263.00	3816.00	3360.00	2466.00

WOOD TOP CAPS

Adding matching wood caps to Boulevard planters > 18"L provides a 3.5" lip and a nicely finished edge. Note that you can also order your wood top caps 4-sided, 3-sided, 2-sided, or 1-sided to match your planter cladding.

To view your wood options, please visit: tournesol.com/materialsfinishes

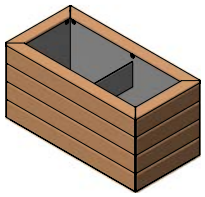

4-sided planter with wood caps

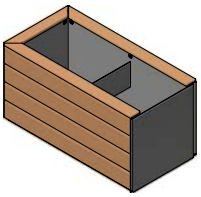

3-sided planter with wood caps

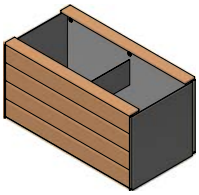

2-sided planter with wood caps

Pricing shown based on Thermally Modified Wood.

PART NO.	DESCRIPTION	PRICE
BVC-4S	Top cap for 4-sided BV Planters less than 48" Long	721.00
BVC-4L	Top cap for 4-sided BV Planters 48" or greater than 48" Long	893.00
BVC-3S	Top cap for 3-sided BV Planters less than 48" Long	609.00
BVC-3L	Top cap for 3-sided BV Planters 48" or greater than 48" Long	771.00
BVC-2S	Top cap for 2-sided BV Planters less than 48" Long	406.00
BVC-2L	Top cap for 2-sided BV Planters 48" or greater than 48" Long	579.00
BVC-1S	Top cap for 1-sided BV Planters less than 48" Long	294.00
BVC-1L	Top cap for 1-sided BV Planters 48" or greater than 48" Long	406.00

Boulevard Planters with Greenscreen® Trellis

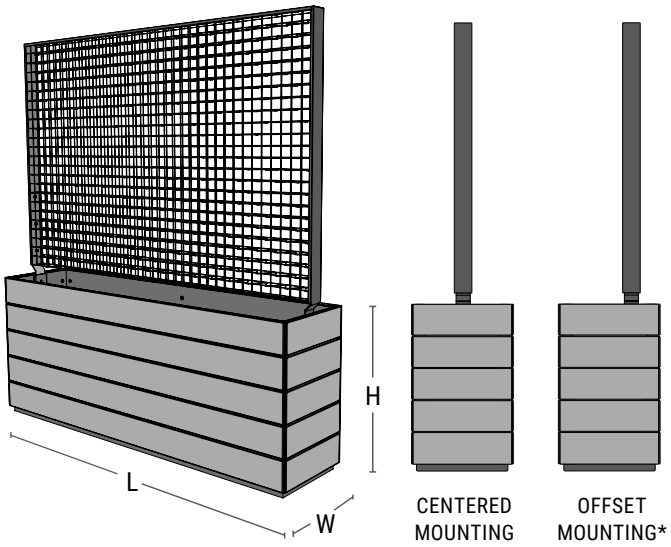



Pricing shown based on Thermally Modified Wood.

* When specifying offset mounting Add "-X" after product number. Example: BVX2-481824-74 is centered mounting, and BVX2-481824-74-X is offset mounting.

PRODUCT	DESCRIPTION	LENGTH	WIDTH	HEIGHT OF PLANTER	TOTAL HEIGHT WITH TRELLIS	PRICE, EA.
BVX2-481824-74	Boulevard Planter with Greenscreen® Trellis, centered	48"L	18"W	24"H	74"H	3025.00
BVX2-481830-80	Boulevard Planter with Greenscreen® Trellis, centered	48"L	18"W	30"H	80"H	3238.00
BVX2-481836-86	Boulevard Planter with Greenscreen® Trellis, centered	48"L	18"W	36"H	86"H	3441.00
BVX2-482424-74	Boulevard Planter with Greenscreen® Trellis, centered	48"L	24"W	24"H	74"H	3126.00
BVX2-482430-80	Boulevard Planter with Greenscreen® Trellis, centered	48"L	24"W	30"H	80"H	3339.00
BVX2-482436-86	Boulevard Planter with Greenscreen® Trellis, centered	48"L	24"W	36"H	86"H	3553.00
BVX2-721824-74	Boulevard Planter with Greenscreen® Trellis, centered	72"L	18"W	24"H	74"H	3877.00
BVX2-721830-80	Boulevard Planter with Greenscreen® Trellis, centered	72"L	18"W	30"H	80"H	4202.00
BVX2-721836-86	Boulevard Planter with Greenscreen® Trellis, centered	72"L	18"W	36"H	86"H	4517.00
BVX2-722424-74	Boulevard Planter with Greenscreen® Trellis, centered	72"L	24"W	24"H	74"H	4192.00
BVX2-722430-80	Boulevard Planter with Greenscreen® Trellis, centered	72"L	24"W	30"H	80"H	4507.00
BVX2-722436-86	Boulevard Planter with Greenscreen® Trellis, centered	72"L	24"W	36"H	86"H	4831.00
BVX2-961824-74	Boulevard Planter with Greenscreen® Trellis, centered	96"L	18"W	24"H	74"H	4649.00
BVX2-961830-80	Boulevard Planter with Greenscreen® Trellis, centered	96"L	18"W	30"H	80"H	4994.00
BVX2-961836-86	Boulevard Planter with Greenscreen® Trellis, centered	96"L	18"W	36"H	86"H	5349.00
BVX2-962424-74	Boulevard Planter with Greenscreen® Trellis, centered	96"L	24"W	24"H	74"H	4933.00
BVX2-962430-80	Boulevard Planter with Greenscreen® Trellis, centered	96"L	24"W	30"H	80"H	5288.00
BVX2-962436-86	Boulevard Planter with Greenscreen® Trellis, centered	96"L	24"W	36"H	86"H	5633.00

Prices listed do not include tax or freight; for a complete quote, submit a quote request by visiting Tournesol.com/requestquote. Pricing effective Oct.29.26.

Boulevard Planters with Laser-Cut Screen

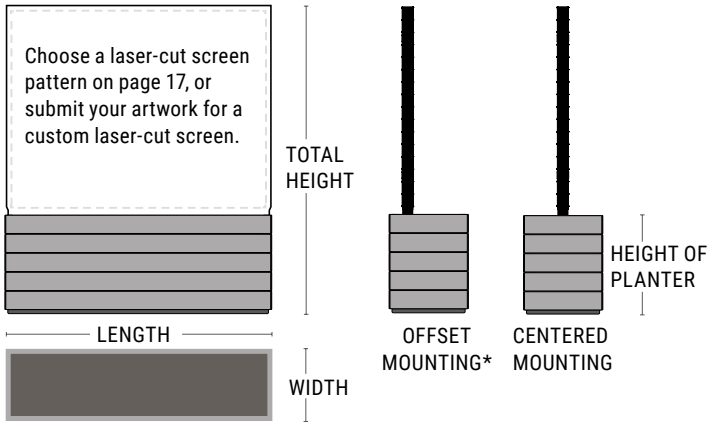



Pricing shown based on Thermally Modified Wood.

* When specifying offset mounting Add "-X" after product number. Example: BVX-481824-74 is centered mounting, and BVX-481824-74-X is offset mounting.

PRODUCT	DESCRIPTION	LENGTH	WIDTH	HEIGHT OF PLANTER	TOTAL HEIGHT WITH SCREEN	PRICE, EA.
BVX-481824-74	Boulevard Planter with Laser-Cut Screen	48"L	18"W	24"H	74"H	3593.00
BVX-481830-80	Boulevard Planter with Laser-Cut Screen	48"L	18"W	30"H	80"H	3766.00
BVX-481836-86	Boulevard Planter with Laser-Cut Screen	48"L	18"W	36"H	86"H	3999.00
BVX-482424-74	Boulevard Planter with Laser-Cut Screen	48"L	24"W	24"H	74"H	3684.00
BVX-482430-80	Boulevard Planter with Laser-Cut Screen	48"L	24"W	30"H	80"H	4050.00
BVX-482436-86	Boulevard Planter with Laser-Cut Screen	48"L	24"W	36"H	86"H	4659.00
BVX-721824-74	Boulevard Planter with Laser-Cut Screen	72"L	18"W	24"H	74"H	4801.00
BVX-721830-80	Boulevard Planter with Laser-Cut Screen	72"L	18"W	30"H	80"H	5085.00
BVX-721836-86	Boulevard Planter with Laser-Cut Screen	72"L	18"W	36"H	86"H	5451.00
BVX-722424-74	Boulevard Planter with Laser-Cut Screen	72"L	24"W	24"H	74"H	5116.00
BVX-722430-80	Boulevard Planter with Laser-Cut Screen	72"L	24"W	30"H	80"H	5603.00
BVX-722436-86	Boulevard Planter with Laser-Cut Screen	72"L	24"W	36"H	86"H	6029.00
BVX-961824-74	Boulevard Planter with Laser-Cut Screen	96"L	18"W	24"H	74"H	5765.00
BVX-961830-80	Boulevard Planter with Laser-Cut Screen	96"L	18"W	30"H	80"H	6080.00
BVX-961836-86	Boulevard Planter with Laser-Cut Screen	96"L	18"W	36"H	86"H	6466.00
BVX-962424-74	Boulevard Planter with Laser-Cut Screen	96"L	24"W	24"H	74"H	6060.00
BVX-962430-80	Boulevard Planter with Laser-Cut Screen	96"L	24"W	30"H	80"H	6537.00
BVX-962436-86	Boulevard Planter with Laser-Cut Screen	96"L	24"W	36"H	86"H	6973.00

PRODUCT	DESCRIPTION	PRICE, EA.
WXS-LC	Custom laser-cut screen charge, varies by design and size	As quoted
WXS Setup CAD	One-time setup charge for laser-cut screens, customer to provide CAD drawings	419.00
WXS Setup PDF	One-time setup charge for laser-cut screens, customer to provide PDF drawings	847.00

Prices listed do not include tax or freight; for a complete quote, submit a quote request by visiting Tournesol.com/requestquote. Pricing effective Oct.29.26.

Laser-Cut Screens

Select one of the patterns shown at right or submit your own artwork.

Available in powder-coated or weathering steel.

Shown at right in 48"L x 48"H

48"L x 48"H

WX-48 INCLUDES ONE
48"L x 48"H LASER-CUT SCREEN.

72"L x 48"H

WX-72 INCLUDES ONE
72"L x 48"H LASER-CUT SCREEN.

96"L x 48"H

WX-96 INCLUDES ONE
96"L x 48"H LASER-CUT SCREEN.

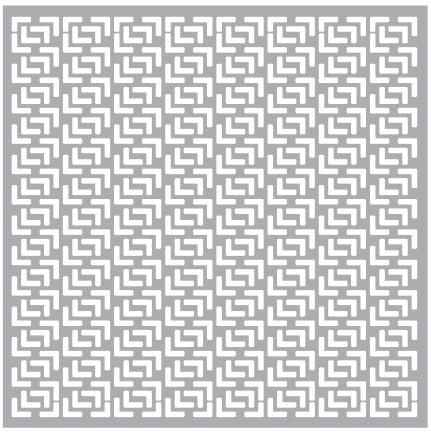

Pattern 2 - 30% Open

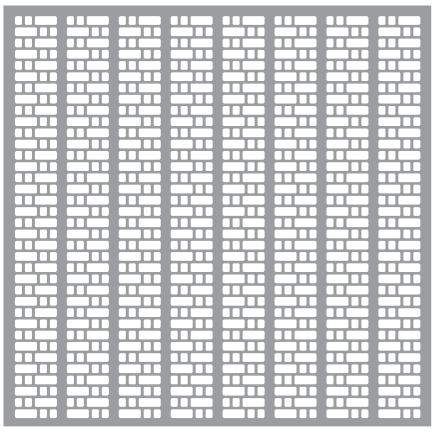

Pattern 3 - 32% Open

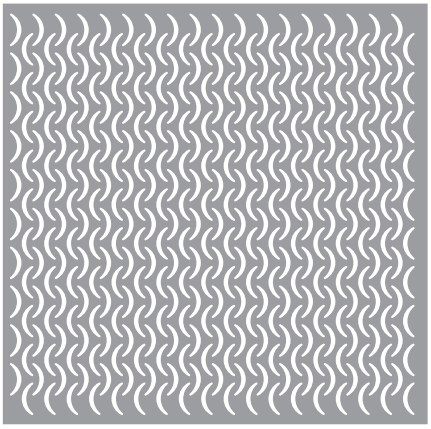

Pattern 4 - 20% Open

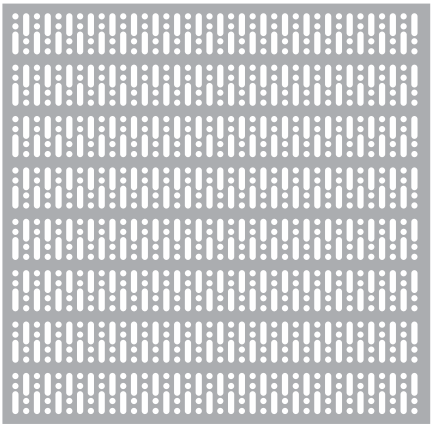

Pattern 6 - 25% Open

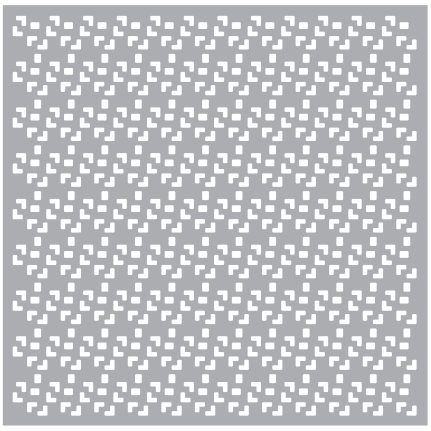

Pattern 7 - 17% Open

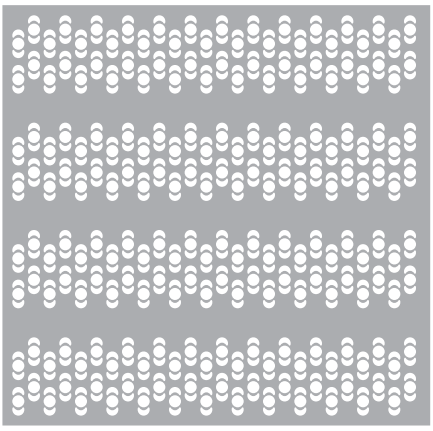

Pattern 8 - 22% Open

Prices listed do not include tax or freight; for a complete quote, submit a quote request by visiting Tournesol.com/requestquote. Pricing effective Oct.29.26

Delta



DELTA STANDARD

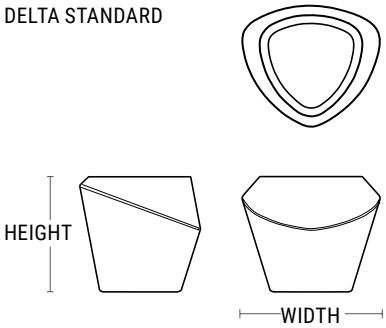

DELTA TALL

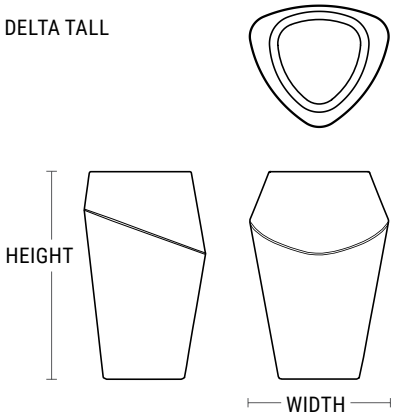

DELTA LOW

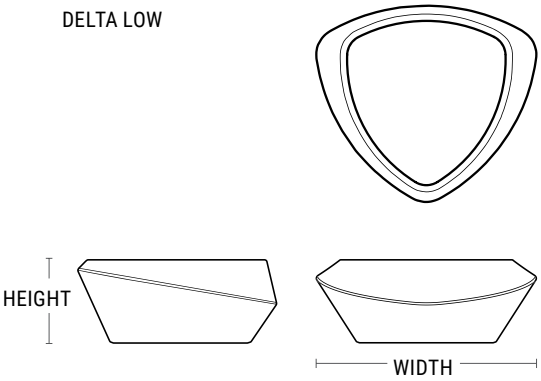

					MATERIALS	
					FRP	GFRC
PRODUCT	DESCRIPTION	WIDTH	HEIGHT	BASE SIZE	DT	DCT
DT/DCT-2420	Delta Sculptural Three-Sided Planter	24"W	20"H	14"	575.00	521.00
DT/DCT-3024	Delta Sculptural Three-Sided Planter	30"W	24"H	20"	880.00	847.00
DT/DCT-3630	Delta Sculptural Three-Sided Planter	36"W	30"H	22"	1250.00	1235.00
DT/DCT-4236	Delta Sculptural Three-Sided Planter	42"W	36"H	28"	1750.00	1673.00
DT/DCT-4836	Delta Sculptural Three-Sided Planter	48"W	36"H	34"	2090.00	2112.00
DT/DCT-3614	Delta Sculptural Three-Sided Planter	36"W	14"H	26"	690.00	694.00
DT/DCT-4216	Delta Sculptural Three-Sided Planter	42"W	16"H	28"	870.00	857.00
DT/DCT-4818	Delta Sculptural Three-Sided Planter	48"W	18"H	30"	1210.00	1153.00
DT/DCT-6023	Delta Sculptural Three-Sided Planter	60"W	23"H	40"	1730.00	1796.00
DT/DCT-2436	Delta Sculptural Three-Sided Planter	24"W	36"H	14"	790.00	796.00
DT/DCT-3042	Delta Sculptural Three-Sided Planter	30"W	42"H	20"	1220.00	1235.00

Prices listed do not include tax or freight; for a complete quote, submit a quote request by visiting Tournesol.com/requestquote. Pricing effective Oct.29.26.

Downtown Collection



Rectangles & Squares

					MATERIALS	
					FRP	GFRC
PRODUCT	DESCRIPTION	LENGTH	WIDTH	HEIGHT	DR	DCR
DR/DCR-242427	Downtown Square	24"L	24"W	27"H	575.00	670.00
DR/DCR-303032	Downtown Square	30"L	30"W	32"H	930.00	969.00
DR/DCR-363634	Downtown Square	36"L	36"W	34"H	1250.00	1309.00
DR/DCR-424234	Downtown Square	42"L	42"W	34"H	1750.00	1690.00
DR/DCR-484836	Downtown Square	48"L	48"W	36"H	2100.00	2060.00
DR/DCR-606042	Downtown Square	60"L	60"W	42"H	3190.00	3544.00
DR/DCR-241818	Downtown Rectangle	24"L	18"W	18"H	550.00	536.00
DR/DCR-361818	Downtown Rectangle	36"L	18"W	18"H	740.00	680.00
DR/DCR-362424	Downtown Rectangle	36"L	24"W	24"H	920.00	948.00
DR/DCR-481818	Downtown Rectangle	48"L	18"W	18"H	920.00	814.00
DR/DCR-482424	Downtown Rectangle	48"L	24"W	24"H	1200.00	1133.00
DR/DCR-601818	Downtown Rectangle	60"L	18"W	18"H	1090.00	979.00
DR/DCR-602424	Downtown Rectangle	60"L	24"W	24"H	1350.00	1391.00



Round

					MATERIALS	
					FRP	GFRC
PRODUCT	DESCRIPTION	DIA.	HEIGHT	BASE SIZE	DS	DCS
DS/DCS-1818	Downtown Round	18" Dia.	18"H	13.5" Dia.	250.00	299.00
DS/DCS-2427	Downtown Round	24" Dia.	27"H	15" Dia.	420.00	495.00
DS/DCS-2418	Downtown Round	24" Dia.	18"H	13" Dia.	390.00	443.00
DS/DCS-3032	Downtown Round	30" Dia.	32"H	18" Dia.	610.00	763.00
DS/DCS-3634	Downtown Round	36" Dia.	34"H	22" Dia.	850.00	1020.00
DS/DCS-3624	Downtown Round	36" Dia.	24"H	18" Dia.	620.00	794.00
DS/DCS-3642	Downtown Round	36" Dia.	42"H	22" Dia.	950.00	1195.00
DS/DCS-4236	Downtown Round	42" Dia.	36"H	26.5" Dia.	1150.00	1360.00
DS/DCS-4836	Downtown Round	48" Dia.	36"H	32" Dia.	1440.00	1689.00
DS/DCS-4824	Downtown Round	48" Dia.	24"H	30.5" Dia.	900.00	1113.00
DS/DCS-6024	Downtown Round	60" Dia.	42"H	38" Dia.	1950.00	2318.00
DS/DCS-6024	Downtown Round	60" Dia.	24"H	42" Dia.	1310.00	1607.00
DS/DCS-7242	Downtown Round	72" Dia.	42"H	50" Dia.	2800.00	2977.00

Prices listed do not include tax or freight; for a complete quote, submit a quote request by visiting Tournesol.com/requestquote. Pricing effective Oct.29.26.

Tournesol

Florence Collection



Rectangles & Squares

PRODUCT	DESCRIPTION	LENGTH	WIDTH	HEIGHT	GFRC
FCR-242418	Florence Square	24”L	24”W	18”H	708.00
FCR-242424	Florence Square	24”L	24”W	24”H	718.00
FCR-303018	Florence Square	30”L	30”W	18”H	677.00
FCR-303024	Florence Square	30”L	30”W	24”H	759.00
FCR-303030	Florence Square	30”L	30”W	30”H	954.00
FCR-363618	Florence Square	36”L	60”W	18”H	995.00
FCR-363624	Florence Square	36”L	36”W	24”H	1138.00
FCR-363630	Florence Square	36”L	36”W	30”H	1692.00
FCR-484818	Florence Square	48”L	48”W	24”H	1599.00
FCR-484824	Florence Square	48”L	48”W	18”H	1815.00
FCR-484830	Florence Square	48”L	48”W	30”H	2050.00
FCR-484836	Florence Square	48”L	48”W	36”H	2286.00
FCR-606018	Florence Square	60”L	60”W	18”H	2409.00
FCR-606024	Florence Square	60”L	60”W	24”H	2747.00
FCR-606036	Florence Square	60”L	60”W	36”H	3260.00
FCR-606042	Florence Square	60”L	60”W	42”H	3434.00
FCR-362418	Florence Rectangle	36”L	24”W	18”H	1066.00
FCR-362424	Florence Rectangle	36”L	24”W	24”H	1118.00
FCR-362430	Florence Rectangle	36”L	24”W	30”H	1497.00
FCR-482418	Florence Rectangle	48”L	24”W	18”H	1251.00
FCR-482424	Florence Rectangle	48”L	24”W	24”H	1292.00
FCR-482430	Florence Rectangle	48”L	24”W	30”H	1815.00
FCR-482436	Florence Rectangle	48”L	24”W	36”H	2050.00
FCR-483618	Florence Rectangle	48”L	36”W	18”H	1640.00
FCR-483624	Florence Rectangle	48”L	36”W	24”H	1958.00
FCR-483630	Florence Rectangle	48”L	36”W	30”H	2245.00
FCR-483636	Florence Rectangle	48”L	36”W	36”H	2563.00
FCR-602418	Florence Rectangle	60”L	24”W	18”H	1517.00
FCR-602424	Florence Rectangle	60”L	24”W	24”H	1558.00
FCR-602430	Florence Rectangle	60”L	24”W	30”H	2112.00
FCR-602436	Florence Rectangle	60”L	24”W	36”H	2430.00
FCR-602442	Florence Rectangle	60”L	24”W	42”H	2696.00
FCR-603618	Florence Rectangle	60”L	36”W	18”H	1897.00
FCR-603624	Florence Rectangle	60”L	36”W	24”H	2245.00

Prices listed do not include tax or freight; for a complete quote, submit a quote request by visiting Tournesol.com/requestquote. Pricing effective Oct.29.26.

Florence Collection

Rectangles & Squares (continued)

PRODUCT	DESCRIPTION	LENGTH	WIDTH	HEIGHT	GFRC
FCR-603630	Florence Rectangle	60”L	36”W	30”H	2553.00
FCR-603636	Florence Rectangle	60”L	36”W	36”H	2870.00
FCR-722430	Florence Rectangle	72”L	24”W	30”H	2440.00
FCR-722436	Florence Rectangle	72”L	24”W	36”H	2788.00
FCR-722442	Florence Rectangle	72”L	24”W	42”H	3075.00
FCR-723618	Florence Rectangle	72”L	36”W	18”H	2184.00
FCR-723624	Florence Rectangle	72”L	36”W	24”H	2563.00
FCR-723630	Florence Rectangle	72”L	36”W	30”H	2983.00
FCR-723636	Florence Rectangle	72”L	36”W	36”H	3362.00



Round

PRODUCT	SHAPE	DIA.	HEIGHT	BASE SIZE	GFRC
FCS-2418	Florence Round	24" Dia.	18"H	20" Dia.	472.00
FCS-2424	Florence Round	24" Dia.	24"H	20" Dia.	492.00
FCS-3018	Florence Round	30" Dia.	18"H	26" Dia.	533.00
FCS-3024	Florence Round	30" Dia.	24"H	26" Dia.	605.00
FCS-3030	Florence Round	30" Dia.	30"H	24" Dia.	759.00
FCS-3618	Florence Round	36" Dia.	18"H	30" Dia.	810.00
FCS-3624	Florence Round	36" Dia.	24"H	29" Dia.	913.00
FCS-3630	Florence Round	36" Dia.	30"H	28" Dia.	1138.00
FCS-4818	Florence Round	48" Dia.	18"H	40" Dia.	1282.00
FCS-4824	Florence Round	48" Dia.	24"H	39" Dia.	1456.00
FCS-4830	Florence Round	48" Dia.	30"H	38" Dia.	1651.00
FCS-4836	Florence Round	48" Dia.	36"H	37" Dia.	1835.00
FCS-6018	Florence Round	60" Dia.	18"H	50" Dia.	1763.00
FCS-6024	Florence Round	60" Dia.	24"H	48" Dia.	2009.00
FCS-6030	Florence Round	60" Dia.	36"H	52" Dia.	2604.00
FCS-6036	Florence Round	60" Dia.	36"H	52" Dia.	2829.00
FCS-6042	Florence Round	60" Dia.	42"H	43" Dia.	3291.00

Prices listed do not include tax or freight; for a complete quote, submit a quote request by visiting Tournesol.com/requestquote. Pricing effective Oct.29.26.

Harlie

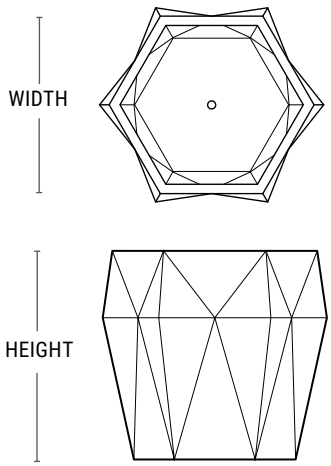



				MATERIALS	
				FRP	GFRC
PRODUCT	DESCRIPTION	WIDTH	HEIGHT	HS	HCS
HS/HCS-2427	Harlie Geometric Planter	24" W	27" H	680.00	590.00
HS/HCS-3030	Harlie Geometric Planter	30" W	30" H	950.00	890.00
HS/HCS-3634	Harlie Geometric Planter	36" W	33.5" H	1275.00	1360.00

Prices listed do not include tax or freight; for a complete quote, submit a quote request by visiting Tournesol.com/requestquote. Pricing effective Oct.29.26.

Kitsap Modular Planter Walls

The versatility of the Kitsap system makes nearly every planter wall project possible. It also makes it very difficult to include in a price list! We no longer price planter wall elements by the piece. Instead, we assess the layout, including the length, wall height, material, and configuration required to develop a price specifically for the project.

As a means of estimating the budget cost or to determine feasibility of an installation, we are pleased to provide approximate linear foot and unit costs for a variety of configurations.

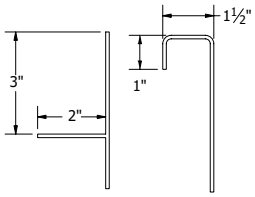

No top lip | Standard return lip

*Weathering Steel prices shown are the base price.
Pre-Weathered Steel - add 10%.

FREESTANDING BASE

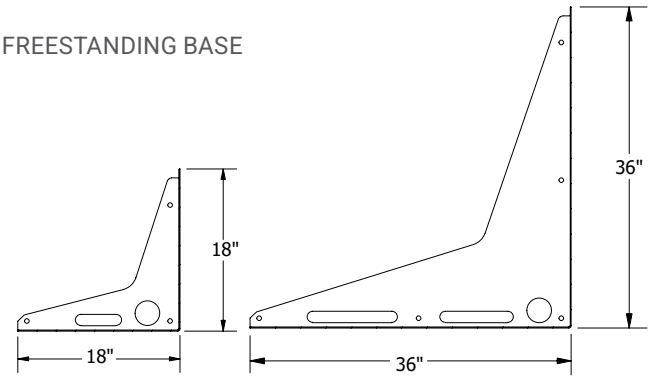

ANCHORED BASE

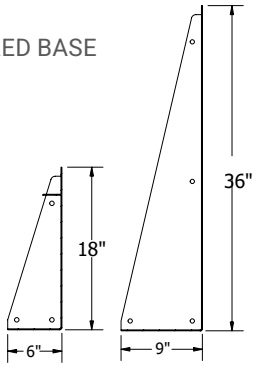

Pricing is approximate, and depends on the details of the application. Contact an advisor to discuss the project.

		WEATHERING STEEL*			POWDER-COATED ALUMINUM	
		Anchored	Freestanding		Anchored	Freestanding
STRAIGHT WALLS Price: per linear inch	6" - 12"H	4.90	5.50		7.10	8.60
	13" - 18"H	5.70	7.80		8.70	12.20
	19" - 30"H	8.40	13.00		13.30	19.60
	31" - 42"H	12.60	19.00		19.70	27.60
	43" - 48"H	15.30	22.30		23.40	31.70
CURVED WALLS Price: per linear inch	6" - 12"H	9.40	10.20		12.80	13.70
	13" - 18"H	10.50	12.50		14.00	16.70
	19" - 30"H	13.70	17.80		18.00	23.50
	31" - 42"H	18.50	24.00		24.10	31.40
	43" - 48"H	21.50	27.40		27.90	35.80

Prices listed do not include tax or freight; for a complete quote, submit a quote request by visiting Tournesol.com/requestquote. Pricing effective Oct.29.26.

Montara Planters

Inspired by the serene and majestic coastline of Northern California, Montara is a sculptural, modern take on a classic mid-century organic shape. The Montara Collection features versatile forms with rounded edges that work together seamlessly, elevating any commercial or residential space.



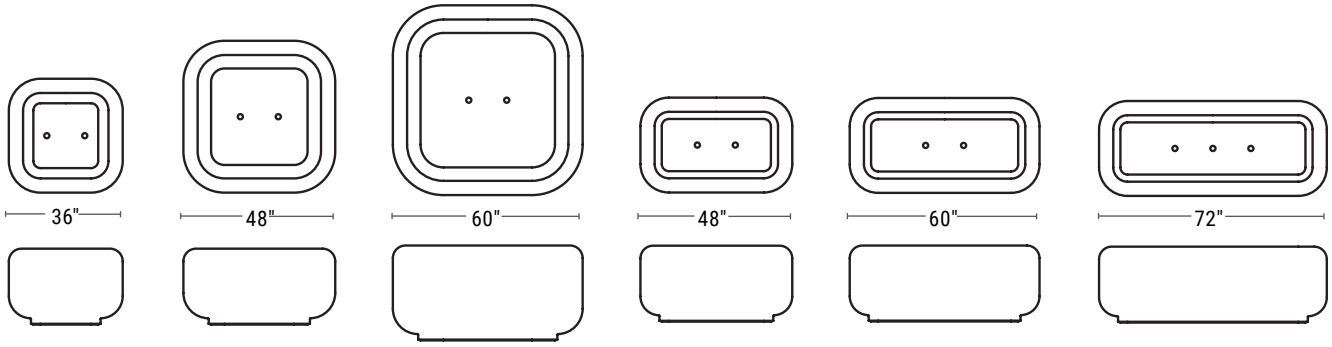

Pair with coordinating Montara Platforms, and Benches found on page 46.

PRODUCT	DESCRIPTION	LENGTH	WIDTH	HEIGHT	FRP	GFRC
MN/MCN-363624	Montara Planters	36"	36"	24"	1180.00	1275.00
MN/MCN-363630	Montara Planters	36"	36"	30"	1320.00	1428.00
MN/MCN-363636	Montara Planters	36"	36"	36"	1360.00	1469.00
MN/MCN-483024	Montara Planters	48"	30"	24"	1460.00	1581.00
MN/MCN-484824	Montara Planters	48"	48"	24"	1560.00	1693.00
MN/MCN-484830	Montara Planters	48"	48"	30"	1670.00	1816.00
MN/MCN-484836	Montara Planters	48"	48"	36"	1780.00	2009.00
MN/MCN-484842	Montara Planters	48"	48"	42"	1930.00	2173.00
MN/MCN-603024	Montara Planters	60"	30"	24"	1690.00	1826.00
MN/MCN-606030	Montara Planters	60"	60"	30"	2330.00	2632.00
MN/MCN-606036	Montara Planters	60"	60"	36"	2670.00	3009.00
MN/MCN-606042	Montara Planters	60"	60"	42"	3050.00	3448.00
MN/MCN-723024	Montara Planters	72"	30"	24"	1910.00	2071.00

Prices listed do not include tax or freight; for a complete quote, submit a quote request by visiting Tournesol.com/requestquote. Pricing effective Oct.29.26.

Paso Planters



Paso Linear Planters



Paso Linear Sectional Planters



Paso Round Planters



Paso Low Round Planters

Pair with coordinating Paso benches found on page 47.

PRODUCT	DESCRIPTION	LENGTH	WIDTH	HEIGHT	GFRC
PCP2882828	Paso Linear Planter	88"L	28"W	28"H	1866.00
PCP2884034	Paso Linear Planter	88"L	40"W	34"H	3516.00
PCG1D64034	Paso Linear Sectional Planter 2 Piece	136"L	40"W	34"H	5833.00
PCG1J44034	Paso Linear Sectional Planter 3 Piece	184"L	40"W	34"H	7903.00
PCG1E82828	Paso Linear Sectional Planter 2 Piece	148"L	28"W	28"H	3373.00
PCG1L82828	Paso Linear Sectional Planter 3 Piece	208"L	28"W	28"H	4746.00
PCP2602828	Paso Section	60"L	28"W	28"H	1394.00
PCP2484034	Paso Section	48"L	40"W	34"H	2112.00
PCP1280028	Paso Round Planter	-	28" Dia.	28"H	718.00
PCP1320030	Paso Round Planter	-	32" Dia.	30"H	872.00
PCP1360032	Paso Round Planter	-	36" Dia.	32"H	1066.00
PCP1400034	Paso Round Planter	-	40" Dia.	34"H	1405.00
PCP1480036	Paso Round Planter	-	48" Dia.	36"H	1712.00
PCP1600038	Paso Round Planter	-	60" Dia.	38"H	2317.00
PCP3740024	Paso Low Round Planter	-	74" Dia.	24"H	2245.00
PCP3970024	Paso Low Round Planter	-	97" Dia.	24"H	2983.00

Prices listed do not include tax or freight; for a complete quote, submit a quote request by visiting Tournesol.com/requestquote. Pricing effective Oct.29.26.

Urban Collection



Rectangles & Squares

					MATERIALS	
					FRP	GFRC
PRODUCT	DESCRIPTION	LENGTH	WIDTH	HEIGHT	UR	UCR
UR/UCR-181824	Urban Square	18”L	18”W	24”H	410.00	-
UR/UCR-181830	Urban Square	18”L	18”W	30”H	575.00	653.00
UR/UCR-242427	Urban Square	24”L	24”W	27”H	650.00	653.00
UR/UCR-242448	Urban Square	24”L	24”W	48”H	650.00	1275.00
UR/UCR-303034	Urban Square	30”L	30”W	34”H	930.00	847.00
UR/UCR-303054	Urban Square	30”L	30”W	54”H	930.00	1734.00
UR/UCR-363634	Urban Square	36”L	36”W	34”H	1250.00	1265.00
UR/UCR-424236	Urban Square	42”L	42”W	36”H	1750.00	1673.00
UR/UCR-484842	Urban Square	48”L	48”W	42”H	2100.00	2040.00
UR/UCR-606042	Urban Square	60”L	60”W	42”H	3190.00	3224.00
UR/UCR-727242	Urban Square	72”L	72”W	42”H	3980.00	4468.00
UR/UCR-241824	Urban Rectangle	24”L	18”W	24”H	550.00	612.00
UR/UCR-361824	Urban Rectangle	36”L	18”W	24”H	740.00	827.00
UR/UCR-481824	Urban Rectangle	48”L	18”W	24”H	920.00	908.00
UR/UCR-601824	Urban Rectangle	60”L	18”W	24”H	1090.00	1082.00
UR/UCR-362424	Urban Rectangle	36”L	24”W	24”H	920.00	1000.00
UR/UCR-482424	Urban Rectangle	48”L	24”W	24”H	1200.00	1184.00
UR/UCR-602424	Urban Rectangle	60”L	24”W	24”H	1350.00	1357.00
UR/UCR-363030	Urban Rectangle	36”L	30”W	30”H	1200.00	1286.00
UR/UCR-483030	Urban Rectangle	48”L	30”W	30”H	1370.00	1541.00
UR/UCR-603030	Urban Rectangle	60”L	30”W	30”H	1650.00	1785.00

Prices listed do not include tax or freight; for a complete quote, submit a quote request by visiting Tournesol.com/requestquote. Pricing effective Oct.29.26.

Urban Collection



Round

					MATERIALS	
					FRP	GFRC
PRODUCT	SHAPE	DIA.	HEIGHT	BASE SIZE	US	UCS
US-1824	Urban Round	18" Dia.	24"H	13.5" Dia.	250.00	-
US/UCS-1830	Urban Round	18" Dia.	30"H	13.5" Dia.	420.00	572.00
US/UCS-2427	Urban Round	24" Dia.	27"H	19" Dia.	420.00	510.00
US/UCS-2448	Urban Round	24" Dia.	48"H	19" Dia.	850.00	908.00
US/UCS-3032	Urban Round	30" Dia.	32"H	25.5" Dia.	610.00	694.00
US/UCS-3054	Urban Round	30" Dia.	54"H	25.5" Dia.	1220.00	1316.00
US/UCS-3634	Urban Round	36" Dia.	34"H	29.5" Dia.	850.00	1020.00
US/UCS-4236	Urban Round	42" Dia.	36"H	37.5" Dia.	1150.00	1347.00
US/UCS-4836	Urban Round	48" Dia.	36"H	42.5" Dia.	1440.00	1663.00
US/UCS-6036	Urban Round	60" Dia.	36"H	53" Dia.	1950.00	2295.00
US-7242	Urban Round	72" Dia.	36"H	65" Dia.	2800.00	-

Prices listed do not include tax or freight; for a complete quote, submit a quote request by visiting Tournesol.com/requestquote. Pricing effective Oct.29.26.

Two-Tone Urban GFRC Round



Round

PRODUCT	SHAPE	DIA.	HEIGHT	BASE SIZE	GFRC
TTF-UCS-1830	Two-Tone Urban Round Tall	18" Dia.	30"H	13.5" Dia.	663.00
TTF-UCS-2448	Two-Tone Urban Round Tall	24" Dia.	48"H	13.5" Dia.	1051.00
TTF-UCS-2427	Two-Tone Urban Round	24" Dia.	27"H	19" Dia.	592.00
TTF-UCS-3032	Two-Tone Urban Round	30" Dia.	32"H	19" Dia.	806.00
TTF-UCS-3054	Two-Tone Urban Round Tall	30" Dia.	54"H	25.5" Dia.	1520.00
TTF-UCS-3634	Two-Tone Urban Round	36" Dia.	34"H	25.5" Dia.	1173.00
TTF-UCS-4236	Two-Tone Urban Round	42" Dia.	36"H	29.5" Dia.	1550.00
TTF-UCS-4836	Two-Tone Urban Round	48" Dia.	36"H	37.5" Dia.	1918.00
TTF-UCS-6036	Two-Tone Urban Round	60" Dia.	36"H	42.5" Dia.	2642.00

Prices listed do not include tax or freight; for a complete quote, submit a quote request by visiting Tournesol.com/requestquote. Pricing effective Oct.29.26.

Wilshire Planters, FRP Hanging Box

Engineered for exterior installation. Designed for easy mounting and structural integrity. Use WBT template; then mark and drill holes. Next, fasten powder-coated steel brackets to the facade using customer-supplied anchors. Mounted brackets now hold the FRP planter in place, making it easy to fasten planters to brackets with included stainless steel mounting hardware.

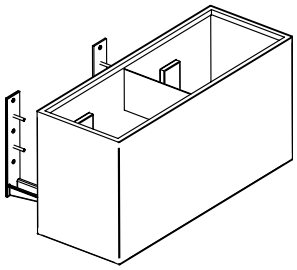



PRODUCT	DESCRIPTION	POCKETS AND BRACKETS	LENGTH	WIDTH	HEIGHT	PRICE, EA.
WB-1012-24	Wilshire Hanging Planter	2 Bracket Pockets and Brackets	24”L	10”W	12”H	660.00
WB-1218-24	Wilshire Hanging Planter	2 Bracket Pockets and Brackets	24”L	12”W	18”H	1020.00
WB-1824-24	Wilshire Hanging Planter	2 Bracket Pockets and Brackets	24”L	18”W	24”H	1320.00
WB-1012-36	Wilshire Hanging Planter	2 Bracket Pockets and Brackets	36”L	10”W	12”H	830.00
WB-1218-36	Wilshire Hanging Planter	2 Bracket Pockets and Brackets	36”L	12”W	18”H	1250.00
WB-1824-36	Wilshire Hanging Planter	2 Bracket Pockets and Brackets	36”L	18”W	24”H	1640.00
WB-1012-48	Wilshire Hanging Planter	2 Bracket Pockets and Brackets	48”L	10”W	12”H	1020.00
WB-1218-48	Wilshire Hanging Planter	2 Bracket Pockets and Brackets	48”L	12”W	18”H	1410.00
WB-1824-48	Wilshire Hanging Planter	2 Bracket Pockets and Brackets	48”L	18”W	24”H	1890.00
WB-1012-60	Wilshire Hanging Planter	3 Bracket Pockets and Brackets	60”L	10”W	12”H	1300.00
WB-1218-60	Wilshire Hanging Planter	3 Bracket Pockets and Brackets	60”L	12”W	18”H	1750.00
WB-1824-60	Wilshire Hanging Planter	3 Bracket Pockets and Brackets	60”L	18”W	24”H	2380.00
WB-1012-72	Wilshire Hanging Planter	3 Bracket Pockets and Brackets	72”L	10”W	12”H	1400.00
WB-1218-72	Wilshire Hanging Planter	3 Bracket Pockets and Brackets	72”L	12”W	18”H	1970.00
WB-1824-72	Wilshire Hanging Planter	3 Bracket Pockets and Brackets	72”L	18”W	24”H	2670.00
WB-1012-96	Wilshire Hanging Planter	4 Bracket Pockets and Brackets	96”L	10”W	12”H	1840.00
WB-1218-96	Wilshire Hanging Planter	4 Bracket Pockets and Brackets	96”L	12”W	18”H	2600.00
WB-1824-96	Wilshire Hanging Planter	4 Bracket Pockets and Brackets	96”L	18”W	24”H	3420.00
WB-1012-120	Wilshire Hanging Planter	5 Bracket Pockets and Brackets	120”L	10”W	12”H	2110.00
WB-1218-120	Wilshire Hanging Planter	5 Bracket Pockets and Brackets	120”L	12”W	18”H	3200.00
WB-1824-120	Wilshire Hanging Planter	5 Bracket Pockets and Brackets	120”L	18”W	24”H	4400.00

PRODUCT	DESCRIPTION	PRICE, EA,
WBBP-1012	Powder-coated steel bracket for 1012 Planters	120.00
WBBS-1012	Stainless steel bracket for 1012 Planters	390.00
WBBP-1218	Powder-coated steel bracket for 1218 Planters	160.00
WBBS-1218	Stainless steel bracket for 1218 Planters	470.00
WBBP-1824	Powder-coated steel bracket for 1824 Planters	180.00
WBBS-1824	Stainless steel bracket for 1824 Planters	500.00
WBT	Drill Template for mounting planters, specify 1012, 1218, or 1824. Price per lin. foot.	80.00

Prices listed do not include tax or freight; for a complete quote, submit a quote request by visiting Tournesol.com/requestquote. Pricing effective Oct.29.26.

Wilshire Planters, Rectangle & Square



POWDER-COATED ALUMINUM

Additional information can be found in the Wilshire Product Details including weight, soil volume, and matching irrigation. Visit the Wilshire Collection page to see the complete collection.

Many of our standard options can be added to Wilshire Planters to meet project needs. Note that the available standard options vary by collection and sizes.

Wilshire is a popular building block for site-specific projects. Tournesol specializes in site-specific design, and seamless integration into the building envelope. Collaborate with us and we can build a unique Wilshire project with you.

*Weathering Steel prices shown are the base price.
Pre-Weathered Steel - add 10%.



GFRC



FRP



WEATHERING STEEL

					MATERIALS			
					FRP	GFRC	WEATHERING STEEL*	POWDER-COATED ALUMINUM
PRODUCT	SHAPE	LENGTH	WIDTH	HEIGHT	WR	WCR	WWR-WS	WWR-AL
181820	Wilshire Square	18"L	18"W	20"H	390.00	-	650.00	720.00
241012	Wilshire Rectangle	24"L	10"W	12"H	240.00	-	540.00	590.00
241218	Wilshire Rectangle	24"L	12"W	18"H	350.00	454.00	620.00	680.00
241236	Wilshire Rectangle	24"L	12"W	36"H	630.00	876.00	830.00	920.00
241818	Wilshire Rectangle	24"L	18"W	18"H	430.00	526.00	680.00	750.00
241824	Wilshire Rectangle	24"L	18"W	24"H	540.00	567.00	760.00	840.00
241830	Wilshire Rectangle	24"L	18"W	30"H	650.00	835.00	840.00	930.00
241836	Wilshire Rectangle	24"L	18"W	36"H	760.00	979.00	920.00	1020.00
242418	Wilshire Square	24"L	24"W	18"H	510.00	752.00	740.00	820.00
242424	Wilshire Square	24"L	24"W	24"H	630.00	680.00	830.00	920.00
303027	Wilshire Square	30"L	30"W	27"H	910.00	989.00	1030.00	1150.00
361012	Wilshire Rectangle	36"L	10"W	12"H	330.00	-	600.00	660.00
361218	Wilshire Rectangle	36"L	12"W	18"H	480.00	546.00	710.00	790.00
361236	Wilshire Rectangle	36"L	12"W	36"H	860.00	1061.00	990.00	1100.00
361818	Wilshire Rectangle	36"L	18"W	18"H	570.00	660.00	780.00	870.00
361824	Wilshire Rectangle	36"L	18"W	24"H	710.00	742.00	890.00	980.00
361830	Wilshire Rectangle	36"L	18"W	30"H	870.00	1041.00	990.00	1100.00
361836	Wilshire Rectangle	36"L	18"W	36"H	1080.00	1175.00	1090.00	1380.00
362418	Wilshire Rectangle	36"L	24"W	18"H	670.00	948.00	850.00	950.00

Prices listed do not include tax or freight; for a complete quote, submit a quote request by visiting Tournesol.com/requestquote. Pricing effective Oct.29.26.

Wilshire Planters, Rectangle & Square

					MATERIALS			
					FRP	GFRC	WEATHERING STEEL*	POWDER-COATED ALUMINUM
PRODUCT	SHAPE	LENGTH	WIDTH	HEIGHT	WR	WCR	WWR-WS	WWR-AL
362424	Wilshire Rectangle	36"L	24"W	24"H	820.00	927.00	970.00	1080.00
362430	Wilshire Rectangle	36"L	24"W	30"H	980.00	1381.00	1080.00	1360.00
362436	Wilshire Rectangle	36"L	24"W	36"H	1140.00	1597.00	1420.00	1550.00
362442	Wilshire Rectangle	36"L	24"W	42"H	1300.00	1803.00	1580.00	1740.00
363018	Wilshire Rectangle	36"L	30"W	18"H	760.00	1072.00	920.00	1020.00
363024	Wilshire Rectangle	36"L	30"W	24"H	930.00	1329.00	1050.00	1170.00
363030	Wilshire Rectangle	36"L	30"W	30"H	1110.00	1329.00	1170.00	1510.00
363036	Wilshire Rectangle	36"L	30"W	36"H	1280.00	1772.00	1570.00	1720.00
363042	Wilshire Rectangle	36"L	30"W	42"H	1450.00	2194.00	1750.00	1930.00
363618	Wilshire Square	36"L	36"W	18"H	860.00	1257.00	990.00	1100.00
363624	Wilshire Square	36"L	36"W	24"H	1040.00	1401.00	1130.00	1440.00
363630	Wilshire Square	36"L	36"W	30"H	1230.00	1422.00	1520.00	1670.00
363636	Wilshire Square	36"L	36"W	36"H	1420.00	1504.00	1720.00	1900.00
363642	Wilshire Square	36"L	36"W	42"H	1650.00	1721.00	1920.00	2130.00
424236	Wilshire Square	42"L	42"W	36"H	2100.00	2050.00	2020.00	2250.00
481012	Wilshire Rectangle	48"L	10"W	12"H	410.00	433.00	670.00	740.00
481218	Wilshire Rectangle	48"L	12"W	18"H	600.00	670.00	810.00	890.00
481236	Wilshire Rectangle	48"L	12"W	36"H	1080.00	1350.00	1350.00	1520.00
481818	Wilshire Rectangle	48"L	18"W	18"H	710.00	845.00	890.00	980.00
481824	Wilshire Rectangle	48"L	18"W	24"H	880.00	907.00	1010.00	1130.00
481830	Wilshire Rectangle	48"L	18"W	30"H	1060.00	1298.00	1140.00	1460.00
481836	Wilshire Rectangle	48"L	18"W	36"H	1230.00	1422.00	1520.00	1670.00
482418	Wilshire Rectangle	48"L	24"W	18"H	820.00	1133.00	970.00	1080.00
482424	Wilshire Rectangle	48"L	24"W	24"H	1010.00	1154.00	1110.00	1400.00
482430	Wilshire Rectangle	48"L	24"W	30"H	1200.00	1628.00	1480.00	1630.00
482436	Wilshire Rectangle	48"L	24"W	36"H	1390.00	1854.00	1680.00	1860.00
482442	Wilshire Rectangle	48"L	24"W	42"H	1580.00	2050.00	1880.00	2090.00
483018	Wilshire Rectangle	48"L	30"W	18"H	930.00	1288.00	1050.00	1170.00
483024	Wilshire Rectangle	48"L	30"W	24"H	1140.00	1566.00	1420.00	1550.00
483030	Wilshire Rectangle	48"L	30"W	30"H	1340.00	1587.00	1630.00	1800.00
483036	Wilshire Rectangle	48"L	30"W	36"H	1590.00	2050.00	1850.00	2050.00
483042	Wilshire Rectangle	48"L	30"W	42"H	1790.00	2534.00	2060.00	2300.00
483618	Wilshire Rectangle	48"L	36"W	18"H	1040.00	1442.00	1130.00	1440.00
483624	Wilshire Rectangle	48"L	36"W	24"H	1260.00	1731.00	1550.00	1710.00
483630	Wilshire Rectangle	48"L	36"W	30"H	1520.00	2030.00	1780.00	1970.00
483636	Wilshire Rectangle	48"L	36"W	36"H	1750.00	2287.00	2010.00	2240.00
483642	Wilshire Rectangle	48"L	36"W	42"H	1970.00	2452.00	2250.00	2510.00
484818	Wilshire Rectangle	48"L	48"W	18"H	1260.00	1834.00	1550.00	1710.00

Prices listed do not include tax or freight; for a complete quote, submit a quote request by visiting Tournesol.com/requestquote. Pricing effective Oct.29.26.

Wilshire Planters, Rectangle & Square

					MATERIALS			
					FRP	GFRC	WEATHERING STEEL*	POWDER-COATED ALUMINUM
PRODUCT	SHAPE	LENGTH	WIDTH	HEIGHT	WR	WCR	WWR-WS	WWR-AL
484824	Wilshire Square	48"L	48"W	24"H	1600.00	1772.00	1820.00	2010.00
484830	Wilshire Square	48"L	48"W	30"H	1810.00	2617.00	2080.00	2320.00
484836	Wilshire Square	48"L	48"W	36"H	2280.00	2174.00	2350.00	2620.00
484842	Wilshire Square	48"L	48"W	42"H	2380.00	3245.00	2610.00	2930.00
601012	Wilshire Rectangle	60"L	10"W	12"H	500.00	505.00	730.00	810.00
601218	Wilshire Rectangle	60"L	12"W	18"H	720.00	732.00	900.00	1000.00
601236	Wilshire Rectangle	60"L	12"W	36"H	1300.00	1638.00	1580.00	1740.00
601818	Wilshire Rectangle	60"L	18"W	18"H	860.00	958.00	990.00	1100.00
601824	Wilshire Rectangle	60"L	18"W	24"H	1060.00	1113.00	1140.00	1460.00
601830	Wilshire Rectangle	60"L	18"W	30"H	1260.00	1504.00	1550.00	1710.00
601836	Wilshire Rectangle	60"L	18"W	36"H	1470.00	1690.00	1770.00	1950.00
602418	Wilshire Rectangle	60"L	24"W	18"H	980.00	1350.00	1080.00	1360.00
602424	Wilshire Rectangle	60"L	24"W	24"H	1200.00	1339.00	1480.00	1630.00
602430	Wilshire Rectangle	60"L	24"W	30"H	1420.00	1885.00	1720.00	1900.00
602436	Wilshire Rectangle	60"L	24"W	36"H	1680.00	2163.00	1950.00	2160.00
602442	Wilshire Rectangle	60"L	24"W	42"H	1910.00	2648.00	2180.00	2430.00
603018	Wilshire Rectangle	60"L	30"W	18"H	1110.00	1535.00	1170.00	1510.00
603024	Wilshire Rectangle	60"L	30"W	24"H	1340.00	1813.00	1630.00	1800.00
603030	Wilshire Rectangle	60"L	30"W	30"H	1620.00	1813.00	1880.00	2090.00
603036	Wilshire Rectangle	60"L	30"W	36"H	1860.00	2421.00	2130.00	2380.00
603042	Wilshire Rectangle	60"L	30"W	42"H	2100.00	3018.00	2380.00	2660.00
603618	Wilshire Rectangle	60"L	36"W	18"H	1230.00	1679.00	1520.00	1670.00
603624	Wilshire Rectangle	60"L	36"W	24"H	1520.00	2009.00	1780.00	1970.00
603630	Wilshire Rectangle	60"L	36"W	30"H	1780.00	2308.00	2050.00	2280.00
603636	Wilshire Rectangle	60"L	36"W	36"H	2040.00	2720.00	2310.00	2590.00
603642	Wilshire Rectangle	60"L	36"W	42"H	2350.00	3039.00	2580.00	2890.00
604818	Wilshire Rectangle	60"L	48"W	18"H	1520.00	1968.00	1780.00	1970.00
604824	Wilshire Rectangle	60"L	48"W	24"H	1810.00	2246.00	2080.00	2320.00
604830	Wilshire Rectangle	60"L	48"W	30"H	2100.00	3070.00	2380.00	2660.00
604836	Wilshire Rectangle	60"L	48"W	36"H	2450.00	3492.00	2680.00	3010.00
604842	Wilshire Rectangle	60"L	48"W	42"H	2740.00	4378.00	2970.00	3350.00
606042	Wilshire Square	60"L	60"W	42"H	3200.00	3616.00	3370.00	3810.00
721012	Wilshire Rectangle	72"L	10"W	12"H	590.00	-	800.00	880.00
721218	Wilshire Rectangle	72"L	12"W	18"H	860.00	866.00	990.00	1100.00
721236	Wilshire Rectangle	72"L	12"W	36"H	1520.00	1885.00	1820.00	2010.00
721818	Wilshire Rectangle	72"L	18"W	18"H	1000.00	1144.00	1090.00	1380.00
721824	Wilshire Rectangle	72"L	18"W	24"H	1230.00	1350.00	1520.00	1670.00
721830	Wilshire Rectangle	72"L	18"W	30"H	1470.00	1761.00	1770.00	1950.00

Prices listed do not include tax or freight; for a complete quote, submit a quote request by visiting Tournesol.com/requestquote. Pricing effective Oct.29.26.

Wilshire Planters, Rectangle & Square

					MATERIALS			
					FRP	GFRC	WEATHERING STEEL*	POWDER-COATED ALUMINUM
PRODUCT	SHAPE	LENGTH	WIDTH	HEIGHT	WR	WCR	WWR-WS	WWR-AL
721836	Wilshire Rectangle	72"L	18"W	36"H	1710.00	1957.00	2010.00	2240.00
722418	Wilshire Rectangle	72"L	24"W	18"H	1140.00	1576.00	1420.00	1550.00
722424	Wilshire Rectangle	72"L	24"W	24"H	1390.00	1587.00	1680.00	1860.00
722430	Wilshire Rectangle	72"L	24"W	30"H	1680.00	2215.00	1950.00	2160.00
722436	Wilshire Rectangle	72"L	24"W	36"H	1940.00	2586.00	2210.00	2470.00
722442	Wilshire Rectangle	72"L	24"W	42"H	2200.00	2905.00	2480.00	2780.00
723018	Wilshire Rectangle	72"L	30"W	18"H	1280.00	1741.00	1570.00	1720.00
723024	Wilshire Rectangle	72"L	30"W	24"H	1590.00	2081.00	1850.00	2050.00
723030	Wilshire Rectangle	72"L	30"W	30"H	1860.00	2153.00	2130.00	2380.00
723036	Wilshire Rectangle	72"L	30"W	36"H	2130.00	2874.00	2410.00	2700.00
723042	Wilshire Rectangle	72"L	30"W	42"H	2460.00	3224.00	2690.00	3030.00
723618	Wilshire Rectangle	72"L	36"W	18"H	1420.00	1927.00	1720.00	1900.00
723624	Wilshire Rectangle	72"L	36"W	24"H	1750.00	2277.00	2010.00	2240.00
723630	Wilshire Rectangle	72"L	36"W	30"H	2040.00	2781.00	2310.00	2590.00
723636	Wilshire Rectangle	72"L	36"W	36"H	2380.00	3142.00	2610.00	2930.00
723642	Wilshire Rectangle	72"L	36"W	42"H	2680.00	3533.00	2910.00	3280.00
724818	Wilshire Rectangle	72"L	48"W	18"H	1750.00	2122.00	2010.00	2240.00
724824	Wilshire Rectangle	72"L	48"W	24"H	2070.00	2565.00	2350.00	2620.00
724830	Wilshire Rectangle	72"L	48"W	30"H	2450.00	3554.00	2680.00	3010.00
724836	Wilshire Rectangle	72"L	48"W	36"H	2780.00	3636.00	3010.00	3390.00
724842	Wilshire Rectangle	72"L	48"W	42"H	3110.00	4676.00	3340.00	3770.00
727242	Wilshire Square	72"L	72"W	42"H	4000.00	4718.00	4200.00	4770.00
961012	Wilshire Rectangle	96"L	10"W	12"H	770.00	-	930.00	1030.00
961218	Wilshire Rectangle	96"L	12"W	18"H	1110.00	1164.00	1170.00	1510.00
961236	Wilshire Rectangle	96"L	12"W	36"H	1960.00	2411.00	2280.00	2550.00
961818	Wilshire Rectangle	96"L	18"W	18"H	1280.00	1298.00	1570.00	1720.00
961824	Wilshire Rectangle	96"L	18"W	24"H	1580.00	1690.00	1880.00	2090.00
961830	Wilshire Rectangle	96"L	18"W	30"H	1920.00	2369.00	2200.00	2450.00
961836	Wilshire Rectangle	96"L	18"W	36"H	2230.00	2503.00	2510.00	2820.00
962418	Wilshire Rectangle	96"L	24"W	18"H	1450.00	2071.00	1750.00	1930.00
962424	Wilshire Rectangle	96"L	24"W	24"H	1810.00	2040.00	2080.00	2320.00
962430	Wilshire Rectangle	96"L	24"W	30"H	2130.00	2884.00	2410.00	2700.00
962436	Wilshire Rectangle	96"L	24"W	36"H	2460.00	3296.00	2740.00	3080.00
962442	Wilshire Rectangle	96"L	24"W	42"H	2840.00	3698.00	3070.00	3470.00
963018	Wilshire Rectangle	96"L	30"W	18"H	1670.00	2277.00	1930.00	2150.00
963024	Wilshire Rectangle	96"L	30"W	24"H	2000.00	2709.00	2280.00	2550.00
963030	Wilshire Rectangle	96"L	30"W	30"H	2340.00	2740.00	2630.00	2950.00
963036	Wilshire Rectangle	96"L	30"W	36"H	2740.00	3636.00	2970.00	3350.00

Prices listed do not include tax or freight; for a complete quote, submit a quote request by visiting Tournesol.com/requestquote. Pricing effective Oct.29.26.

Wilshire Planters, Rectangle & Square

					MATERIALS			
					FRP	GFRC	WEATHERING STEEL*	POWDER-COATED ALUMINUM
PRODUCT	SHAPE	LENGTH	WIDTH	HEIGHT	WR	WCR	WWR-WS	WWR-AL
963042	Wilshire Rectangle	96"L	30"W	42"H	3090.00	4069.00	3320.00	3750.00
963618	Wilshire Rectangle	96"L	36"W	18"H	1840.00	2503.00	2110.00	2360.00
963624	Wilshire Rectangle	96"L	36"W	24"H	2200.00	2967.00	2480.00	2780.00
963630	Wilshire Rectangle	96"L	36"W	30"H	2610.00	3492.00	2840.00	3200.00
963636	Wilshire Rectangle	96"L	36"W	36"H	2970.00	3966.00	3210.00	3620.00
963642	Wilshire Rectangle	96"L	36"W	42"H	3340.00	4347.00	3570.00	4040.00
964818	Wilshire Rectangle	96"L	48"W	18"H	2200.00	2761.00	2480.00	2780.00
964824	Wilshire Rectangle	96"L	48"W	24"H	2640.00	3296.00	2880.00	3240.00
964830	Wilshire Rectangle	96"L	48"W	30"H	3040.00	4471.00	3270.00	3700.00
964836	Wilshire Rectangle	96"L	48"W	36"H	3440.00	4553.00	3670.00	4160.00
964842	Wilshire Rectangle	96"L	48"W	42"H	3830.00	5820.00	4070.00	4620.00
1201012	Wilshire Rectangle	120"L	10"W	12"H	950.00	-	-	-
1201218	Wilshire Rectangle	120"L	12"W	18"H	1360.00	1463.00	-	-
1201236	Wilshire Rectangle	120"L	12"W	36"H	2460.00	-	-	-
1201818	Wilshire Rectangle	120"L	18"W	18"H	1560.00	1824.00	-	-
1201824	Wilshire Rectangle	120"L	18"W	24"H	1970.00	2184.00	-	-
1201830	Wilshire Rectangle	120"L	18"W	30"H	2340.00	2926.00	-	-
1201836	Wilshire Rectangle	120"L	18"W	36"H	2710.00	3204.00	-	-
1202418	Wilshire Rectangle	120"L	24"W	18"H	1810.00	2452.00	-	-
1202424	Wilshire Rectangle	120"L	24"W	24"H	2200.00	2524.00	-	-
1202430	Wilshire Rectangle	120"L	24"W	30"H	2580.00	3554.00	-	-
1202436	Wilshire Rectangle	120"L	24"W	36"H	3040.00	4048.00	-	-
1202442	Wilshire Rectangle	120"L	24"W	42"H	3440.00	4553.00	-	-
1203018	Wilshire Rectangle	120"L	30"W	18"H	2020.00	2802.00	-	-
1203024	Wilshire Rectangle	120"L	30"W	24"H	2420.00	3369.00	-	-
1203030	Wilshire Rectangle	120"L	30"W	30"H	2890.00	3358.00	-	-
1203036	Wilshire Rectangle	120"L	30"W	36"H	3300.00	4460.00	-	-
1203042	Wilshire Rectangle	120"L	30"W	42"H	3720.00	5470.00	-	-
1203618	Wilshire Rectangle	120"L	36"W	18"H	2230.00	3101.00	-	-
1203624	Wilshire Rectangle	120"L	36"W	24"H	2710.00	3678.00	-	-
1203630	Wilshire Rectangle	120"L	36"W	30"W	3140.00	4265.00	-	-
1203636	Wilshire Rectangle	120"L	36"W	36"W	3570.00	4821.00	-	-
1203642	Wilshire Rectangle	120"L	36"W	42"H	4000.00	5356.00	-	-

Prices listed do not include tax or freight; for a complete quote, submit a quote request by visiting Tournesol.com/requestquote. Pricing effective Oct.29.26.

Wilshire Planters, Round



GFRC Round with Toe Kick



FRP Round



Weathering Steel Round



Aluminum Round with Toe kick

					MATERIALS			
					FRP	GFRC	WEATHERING STEEL	POWDER-COATED ALUMINUM
PRODUCT	DESCRIPTION	DIA.	HEIGHT	BASE SIZE	WS	WCS	WWS-WS	WWS-AL
1820	Wilshire Round	18" Dia.	20"H	15" Dia.	270.00	-	370.00	490.00
2424	Wilshire Round	24" Dia.	24"H	21" Dia.	420.00	464.00	690.00	810.00
3027	Wilshire Round	30" Dia.	27"H	26" Dia.	610.00	732.00	1060.00	1170.00
3630	Wilshire Round	36" Dia.	30"H	32" Dia.	850.00	1113.00	1480.00	1600.00
4233	Wilshire Round	42" Dia.	33"H	38" Dia.	1170.00	1422.00	2120.00	2230.00
4836	Wilshire Round	48" Dia.	36"H	44" Dia.	1440.00	1762.00	2530.00	2640.00
6036	Wilshire Round	60" Dia.	36"H	56" Dia.	1910.00	2472.00	3400.00	3510.00
7242	Wilshire Round	72" Dia.	42"H	68" Dia.	2900.00	3121.00	4860.00	4960.00

Prices listed do not include tax or freight; for a complete quote, submit a quote request by visiting Tournesol.com/requestquote. Pricing effective Oct.29.26.

Two-Tone Wilshire Planters, GFRC Round with Toe kick



PRODUCT	DESCRIPTION	DIA.	HEIGHT	BASE SIZE	GFRC
TTF-WCS-1830	Two-Tone Wilshire Round w/ Toe Kick	18" Dia.	30"H	15" Dia.	742.00
TTF-WCS-2424	Two-Tone Wilshire Tall Round w/ Toe Kick	24" Dia.	30"H	15" Dia.	536.00
TTF-WCS-2448	Two-Tone Wilshire Tall Round w/ Toe Kick	24" Dia.	48"H	21" Dia.	1442.00
TTF-WCS-3027	Two-Tone Wilshire Round w/ Toe Kick	30" Dia.	27"H	26" Dia.	845.00
TTF-WCS-3054	Two-Tone Wilshire Tall Round w/ Toe Kick	30" Dia.	54"H	26" Dia.	1999.00
TTF-WCS-3630	Two-Tone Wilshire Round w/ Toe Kick	36" Dia.	30"H	32" Dia.	1288.00
TTF-WCS-4233	Two-Tone Wilshire Round w/ Toe Kick	42" Dia.	33"H	38" Dia.	1638.00
TTF-WCS-4836	Two-Tone Wilshire Round w/ Toe Kick	48" Dia.	36"H	44" Dia.	2029.00
TTF-WCS-6036	Two-Tone Wilshire Round w/ Toe Kick	60" Dia.	36"H	56" Dia.	2843.00
TTF-WCS-7242	Two-Tone Wilshire Round w/ Toe Kick	72" Dia.	42"H	68" Dia.	3513.00

Prices listed do not include tax or freight; for a complete quote, submit a quote request by visiting Tournesol.com/requestquote. Pricing effective Oct.29.26.

Wilshire Planters with Greenscreen® Trellis

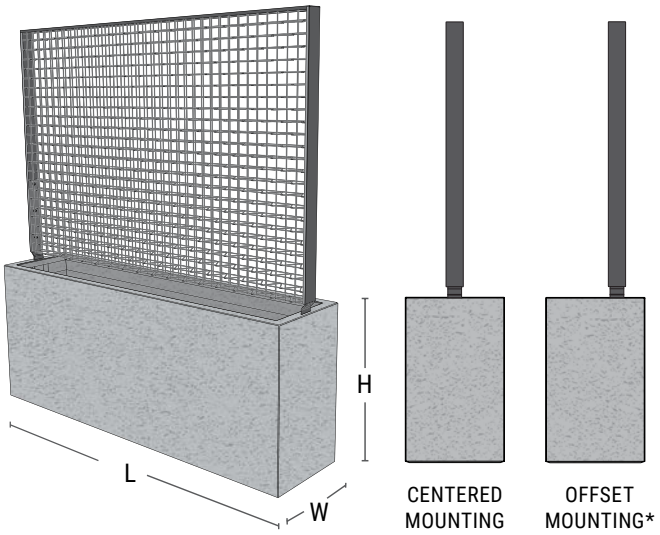



* Add "-X" after product number to indicate optional offset mounting.

						MATERIALS	
						FRP	GFRC
PRODUCT	DESCRIPTION	LENGTH	WIDTH	HEIGHT OF PLANTER	TOTAL HEIGHT WITH TRELLIS	WX	WCX
__2-481824-74	Wilshire Planter with Greenscreen® Trellis, centered	48"L	18"W	24"H	74"H	1949.00	1700.00
__2-481830-80	Wilshire Planter with Greenscreen® Trellis, centered	48"L	18"W	30"H	80"H	2265.00	1988.00
__2-481836-86	Wilshire Planter with Greenscreen® Trellis, centered	48"L	18"W	36"H	86"H	2581.00	2256.00
__2-482424-74	Wilshire Planter with Greenscreen® Trellis, centered	48"L	24"W	24"H	74"H	2214.00	1978.00
__2-482430-80	Wilshire Planter with Greenscreen® Trellis, centered	48"L	24"W	30"H	80"H	2550.00	2256.00
__2-482436-86	Wilshire Planter with Greenscreen® Trellis, centered	48"L	24"W	36"H	86"H	2877.00	2545.00
__2-721824-74	Wilshire Planter with Greenscreen® Trellis, centered	72"L	18"W	24"H	74"H	2550.00	2266.00
__2-721830-80	Wilshire Planter with Greenscreen® Trellis, centered	72"L	18"W	30"H	80"H	2958.00	2606.00
__2-721836-86	Wilshire Planter with Greenscreen® Trellis, centered	72"L	18"W	36"H	86"H	3366.00	2946.00
__2-722424-74	Wilshire Planter with Greenscreen® Trellis, centered	72"L	24"W	24"H	74"H	2826.00	2524.00
__2-722430-80	Wilshire Planter with Greenscreen® Trellis, centered	72"L	24"W	30"H	80"H	3254.00	2864.00
__2-722436-86	Wilshire Planter with Greenscreen® Trellis, centered	72"L	24"W	36"H	86"H	3672.00	3204.00
__2-961824-74	Wilshire Planter with Greenscreen® Trellis, centered	96"L	18"W	24"H	74"H	3315.00	3070.00
__2-961830-80	Wilshire Planter with Greenscreen® Trellis, centered	96"L	18"W	30"H	80"H	3815.00	3533.00
__2-961836-86	Wilshire Planter with Greenscreen® Trellis, centered	96"L	18"W	36"H	86"H	4315.00	3997.00
__2-962424-74	Wilshire Planter with Greenscreen® Trellis, centered	96"L	24"W	24"H	74"H	3978.00	3678.00
__2-962430-80	Wilshire Planter with Greenscreen® Trellis, centered	96"L	24"W	30"H	80"H	4570.00	4151.00
__2-962436-86	Wilshire Planter with Greenscreen® Trellis, centered	96"L	24"W	36"H	86"H	5162.00	4615.00

Prices listed do not include tax or freight; for a complete quote, submit a quote request by visiting Tournesol.com/requestquote. Pricing effective Oct.29.26.

Wilshire Planters with Laser-Cut Screen

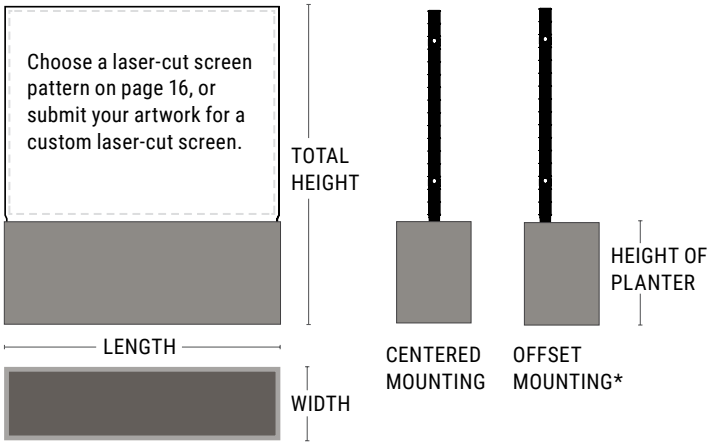



* When specifying offset mounting, Add "-X" after product number. Example: WX-481824-74 is centered mounting, and WX-481824-74-X is offset mounting.

						MATERIALS	
						FRP	GFRC
PRODUCT	DESCRIPTION	LENGTH	WIDTH	HEIGHT OF PLANTER	TOTAL HEIGHT WITH SCREEN	WX	WCX
__-481824-74	Wilshire Planter with laser-cut screen	48"L	18"W	24"H	74"H	2418.00	2256.00
__-481830-80	Wilshire Planter with laser-cut screen	48"L	18"W	30"H	80"H	2744.00	2565.00
__-481836-86	Wilshire Planter with laser-cut screen	48"L	18"W	36"H	86"H	3040.00	2823.00
__-482424-74	Wilshire Planter with laser-cut screen	48"L	24"W	24"H	74"H	2765.00	2534.00
__-482430-80	Wilshire Planter with laser-cut screen	48"L	24"W	30"H	80"H	3050.00	2812.00
__-482436-86	Wilshire Planter with laser-cut screen	48"L	24"W	36"H	86"H	3377.00	3080.00
__-721824-74	Wilshire Planter with laser-cut screen	72"L	18"W	24"H	74"H	3407.00	3193.00
__-721830-80	Wilshire Planter with laser-cut screen	72"L	18"W	30"H	80"H	3540.00	3482.00
__-721836-86	Wilshire Planter with laser-cut screen	72"L	18"W	36"H	86"H	4162.00	3873.00
__-722424-74	Wilshire Planter with laser-cut screen	72"L	24"W	24"H	74"H	3734.00	3451.00
__-722430-80	Wilshire Planter with laser-cut screen	72"L	24"W	30"H	80"H	4060.00	3781.00
__-722436-86	Wilshire Planter with laser-cut screen	72"L	24"W	36"H	86"H	4295.00	4234.00
__-961824-74	Wilshire Planter with laser-cut screen	96"L	18"W	24"H	74"H	4335.00	4162.00
__-961830-80	Wilshire Planter with laser-cut screen	96"L	18"W	30"H	80"H	4845.00	4553.00
__-961836-86	Wilshire Planter with laser-cut screen	96"L	18"W	36"H	86"H	5345.00	5089.00
__-962424-74	Wilshire Planter with laser-cut screen	96"L	24"W	24"H	74"H	4958.00	4780.00
__-962430-80	Wilshire Planter with laser-cut screen	96"L	24"W	30"H	80"H	5396.00	5130.00
__-962436-86	Wilshire Planter with laser-cut screen	96"L	24"W	36"H	86"H	5855.00	5614.00

PRODUCT	DESCRIPTION	PRICE, EA.
WXS-LC	Custom laser-cut screen charge, varies by design and size	As quoted
WXS Setup CAD	One-time setup charge for laser-cut screens, customer to provide CAD drawings	419.00
WXS Setup PDF	One-time setup charge for laser-cut screens, customer to provide PDF drawings	847.00

Prices listed do not include tax or freight; for a complete quote, submit a quote request by visiting Tournesol.com/requestquote. Pricing effective Oct.29.26.

Tournesol

Zena Planters



					MATERIALS	
					FRP	GFRC
PRODUCT	SHAPE	DIA.	HEIGHT	BASE SIZE	ZS	ZCS
ZS/ZCS-2418	Zena Round	24" Dia.	18"H	10" Dia.	390.00	561.00
ZS/ZCS-2424	Zena Round	24" Dia.	24"H	10" Dia.	420.00	632.00
ZS/ZCS-3018	Zena Round	30" Dia.	18"H	11" Dia.	550.00	704.00
ZS/ZCS-3024	Zena Round	30" Dia.	24"H	11" Dia.	590.00	704.00
ZS/ZCS-3024	Zena Round	30" Dia.	30"H	13" Dia.	610.00	806.00
ZS/ZCS-3618	Zena Round	36" Dia.	18"H	11" Dia.	600.00	755.00
ZS/ZCS-3624	Zena Round	36" Dia.	24"H	10" Dia.	620.00	867.00
ZS/ZCS-3630	Zena Round	36" Dia.	30"H	13" Dia.	850.00	949.00
ZS/ZCS-4818	Zena Round	48" Dia.	18"H	12" Dia.	870.00	1204.00
ZS/ZCS-4824	Zena Round	48" Dia.	24"H	12" Dia.	900.00	1479.00
ZS/ZCS-4830	Zena Round	48" Dia.	30"H	17" Dia.	1420.00	1551.00
ZS/ZCS-4836	Zena Round	48" Dia.	36"H	17" Dia.	1440.00	1714.00
ZS/ZCS-6018	Zena Round	60" Dia.	18"H	15" Dia.	1280.00	1663.00
ZS/ZCS-6024	Zena Round	60" Dia.	24"H	15" Dia.	1310.00	1898.00
ZS/ZCS-6036	Zena Round	60" Dia.	36"H	20" Dia.	1950.00	2428.00
ZS/ZCS-6042	Zena Round	60" Dia.	30"H	20" Dia.	1950.00	2805.00

Prices listed do not include tax or freight; for a complete quote, submit a quote request by visiting Tournesol.com/requestquote. Pricing effective Oct.29.26.

Tournesol



greenscreen®







Prices listed do not include tax or freight; for a complete quote, submit a quote request by visiting Tournesol.com/requestquote. Pricing effective Oct.29.26

Greenscreen®

Budget Pricing for Wall Mounted Trellis

Budgetary pricing: $22.50 to $26.50 per square foot for materials only, based on using 4' wide panels and standard adjustable mounting clips.

Excluded from budgetary pricing: installation cost, wall anchors, plant material, packaging, freight, tax, shop drawings, engineering fees, custom sizes, shapes, angle cuts, cutouts, colors, and enhanced powder-coating for coastal zone locations.

WALL BUDGETARY PRICING USING 4' WIDE PANELS AND MOUNTING CLIPS (5132R OR 5132G):
4' wide panels and clips = $22.50 –$26.50 per square foot for materials only

Budget Pricing for Fencing

Budgetary pricing: based on a continuous run of 50 linear feet and standard posts. For fencing applications, posts can be a maximum of 52" on center utilizing a 4' wide panel in a vertical orientation, or posts can be a maximum of 100" on center using an 8' wide panel in a horizontal orientation.

Excluded from budgetary pricing: installation cost, plant materials, packaging, freight, tax, shop drawings, engineering fees, custom sizes, shapes, angle cuts, cutouts, colors, and enhanced powder-coating for coastal zone locations.

Note: Locations in hurricane zones will need appropriate posts and site-specific engineering increasing costs.

FENCING BUDGETARY PRICING WITH STANDARD POSTS PLACED AT 52" O.C.:
4' high screen with posts set at 52" on center = $190 – $205 per linear foot
6' high screen with posts set at 52" on center = $225 – $240 per linear foot
8' high screen with posts set at 52" on center = $270 – $280 per linear foot

FENCING BUDGETARY PRICING WITH STANDARD POSTS PLACED AT 100" O.C.:
4' high screen with posts set at 100" on center = $130 – $145 per linear foot
6' high screen with posts set at 100" on center = $180 – $195 per linear foot
8' high screen with posts set at 100" on center = $200 – $220 per linear foot

Budgeting for Infill, Overhead, and Columns

For Infill, Overhead, and Column pricing, please consult with one of our Advisors who can accommodate your project's specifications.

Prices listed do not include tax or freight; for a complete quote, submit a quote request by visiting Tournesol.com/requestquote. Pricing effective Oct.29.26.

Tournesol





Tables & Benches





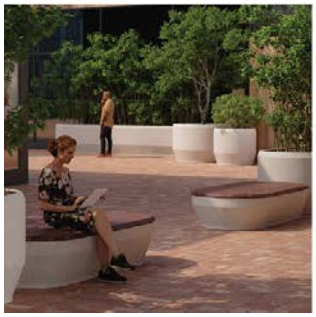



Prices listed do not include tax or freight; for a complete quote, submit a quote request by visiting Tournesol.com/requestquote. Pricing effective Oct.29.26

Alpha

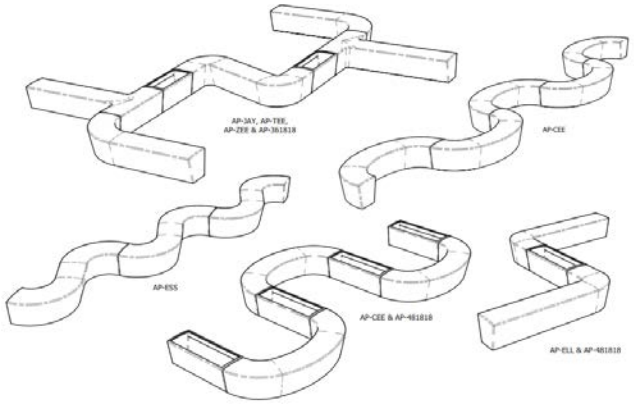



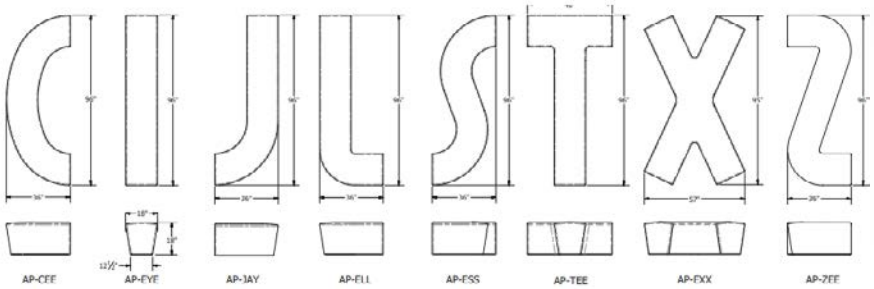

PRODUCT	DESCRIPTION	LENGTH	WIDTH	HEIGHT	WEIGHT	PRICE, EA.
AP-CEE	Alpha Collection GFRC concrete letter "C" bench	96"L	36"W	18"H	315	2540.00
AP-EYE	Alpha Collection GFRC concrete letter "I" bench	96"L	18"W	18"H	286	2234.00
AP-JAY	Alpha Collection GFRC concrete letter "J" bench	96"L	36"W	18"H	300	2428.00
AP-ELL	Alpha Collection GFRC concrete letter "L" bench	96"L	36"W	18"H	325	2601.00
AP-ESS	Alpha Collection GFRC concrete letter "S" bench	96"L	36"W	18"H	312	2489.00
AP-TEE	Alpha Collection GFRC concrete letter "T" bench	96"L	48"W	18"H	365	2948.00
AP-EXX	Alpha Collection GFRC concrete letter "X" bench	96"L	57"W	18"H	468	3815.00
AP-ZEE	Alpha Collection GFRC concrete letter "Z" bench	96"L	36"W	18"H	365	2948.00
AP-241818	Alpha Collection GFRC planter	24"L	18"W	18"H	92	1112.00
AP-361818	Alpha Collection GFRC planter	36"L	18"W	18"H	118	1020.00
AP-481818	Alpha Collection GFRC planter	48"L	18"W	18"H	143	1245.00
AP-601818	Alpha Collection GFRC planter	60"L	18"W	18"H	182	1163.00
AP-721818	Alpha Collection GFRC planter	72"L	18"W	18"H	208	1632.00
AP-961818	Alpha Collection GFRC planter	96"L	18"W	18"H	275	1775.00
AP-24	Alpha Collection GFRC straight bench	24"L	18"W	18"H	93	776.00
AP-48	Alpha Collection GFRC straight bench	48"L	18"W	18"H	155	1235.00
AP-72	Alpha Collection GFRC straight bench	72"L	18"W	18"H	218	1765.00
AP-1845	Alpha Collection GFRC 45° angle bench	43"L	43"W	18"H	135	1112.00
AP-1890	Alpha Collection GFRC 90° angle bench	36"L	36"W	18"H	160	1112.00
AST	Optional stainless steel skate stop for bench, surface mounted with two SS panhead 3/8" x 3/4" screws and expansion anchors included.					50.00

Prices listed do not include tax or freight; for a complete quote, submit a quote request by visiting Tournesol.com/requestquote. Pricing effective Oct.29.26.

Camino Modular Benches

STRAIGHT BENCHES

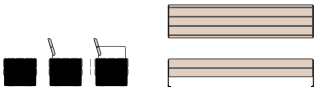

Straight

BACKS, ARMS, INHIBITORS



Bench



+ Inhibitors



+ Back



+ Back with 2 Arms



+ Back with 3 Arms

45° BENCHES

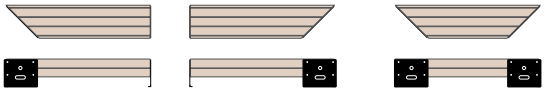

45° Left | 45° Right | 45° Both

60° BENCHES

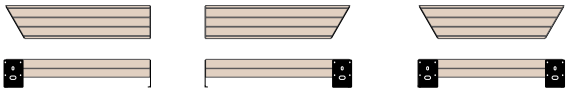

60° Left | 60° Right | 60° Both

Camino Straight

Pricing shown based on Thermally Modified Wood.

PRODUCT	DESCRIPTION	LENGTH	WIDTH	HEIGHT	WEIGHT	PRICE, EA.
CB-90-0	Camino Bench, Straight, Standalone	92"	21"	18"	220	2920.00
CB-90-1	Camino Bench, Straight, 1 Joiner	92"	21"	18"	220	2920.00
CB-90-2	Camino Bench, 2 Joiners	92"	21"	18"	220	2920.00
CBK-90-2-ADA	Camino Back ADA, Straight, 2 Armrests	89"	21"	19"	78	1060.00
CBK-90-0	Camino Back, Straight, no Armrests	89"	5"	13"	47	830.00
CBK-90-2	Camino Back, Straight, 2 Armrests	89"	21"	13"	62	1060.00
CBK-90-3	Camino Back, Straight, 3 Armrests	89"	21"	13"	70	1220.00

Camino 45°

PRODUCT	DESCRIPTION	LENGTH	WIDTH	HEIGHT	WEIGHT	PRICE, EA.
CB-45L-1	Camino Bench, 45° Left, 1 Joiner	92"	21"	18"	213	2920.00
CB-45L-2	Camino Bench, 45° Left, 2 Joiners	92"	21"	18"	213	2920.00
CB-45R-1	Camino Bench, 45° Right, 1 Joiner	92"	21"	18"	213	2920.00
CB-45R-2	Camino Bench, 45° Right, 2 Joiners	92"	21"	18"	213	2920.00
CB-45B-2	Camino Bench, 45° Both, 2 Joiners	92"	21"	18"	206	2920.00
CBK-45-S	Camino Back, Short Edge, 45°, no Armrests	67"	5"	13"	39	830.00
CBK-45-S2	Camino Back, Short Edge, 45°, 2 Armrests	67"	21"	13"	54	1060.00
CBK-45-L	Camino Back, Long Edge, 45°, no Armrests	67"	5"	13"	39	830.00
CBK-45-L2	Camino Back, Long Edge, 45°, 2 Armrests	67"	21"	13"	54	1060.00
CBK-45-0	Camino Back, Short Edge, 45° Both, no Armrests	45"	5"	13"	27	830.00
CBK-45-1	Camino Back, Short Edge, 45° Both, 1 Armrest	45"	21"	13"	38	830.00
CH-1	Camino Inhibitor, 1 Piece Kit for CB-45B only	18"	4"	9"	9	110.00
CH-2	Camino Inhibitor, 2 Piece Kit	18"	4"	9"	18	220.00

Prices listed do not include tax or freight; for a complete quote, submit a quote request by visiting Tournesol.com/requestquote. Pricing effective Oct.29.26.

Camino 60°

Pricing shown based on Thermally Modified Wood.

PRODUCT	DESCRIPTION	LENGTH	WIDTH	HEIGHT	WEIGHT	PRICE, EA.
CB-60L-1	Camino Bench, 60° Left, 1 Joiner	92"	21"	18"	212	2920.00
CB-60L-2	Camino Bench, 60° Left, 2 Joiners	92"	21"	18"	212	2920.00
CB-60R-1	Camino Bench, 60° Right, 1 Joiner	92"	21"	18"	212	2920.00
CB-60R-2	Camino Bench, 60° Right, 2 Joiners	92"	21"	18"	212	2920.00
CB-60B-2	Camino Bench, 60° Both, 2 Joiners	92"	21"	18"	208	2920.00
CBK-60-S	Camino Back, Short Edge, 60°, no Armrests	77"	5"	13"	42	830.00
CBK-60-S2	Camino Back, Short Edge, 60°, 2 Armrests	77"	21"	13"	58	1060.00
CBK-60-L	Camino Back, Long Edge, 60°, no Armrests	77"	5"	13"	42	830.00
CBK-60-L2	Camino Back, Long Edge, 60°, 2 Armrests	77"	21"	13"	58	1060.00
CBK-60-0	Camino Back, Short Edge, 60° Both, no Armrests	64"	5"	13"	38	830.00
CBK-60-2	Camino Back, Short Edge, 60° Both, 2 Armrests	64"	21"	13"	54	1060.00
CH-2	Camino Inhibitor, 2 Piece Kit	18"	4"	9"	18	220.00

Camino Lighting

STARTER KITS & ADDER KITS

Begin with a Starter Kit which includes an LED driver, driver mounting bracket, tray, light bar, and connectors. If connecting additional benches, connect up to three Adder Kits. If additional lighting is needed, add a new Starter Kit and continue adding up to three Adder Kits. Starter Kits can be daisy-chained from one power location by running cable through openings in Joiner Ends above Lighting Kits.

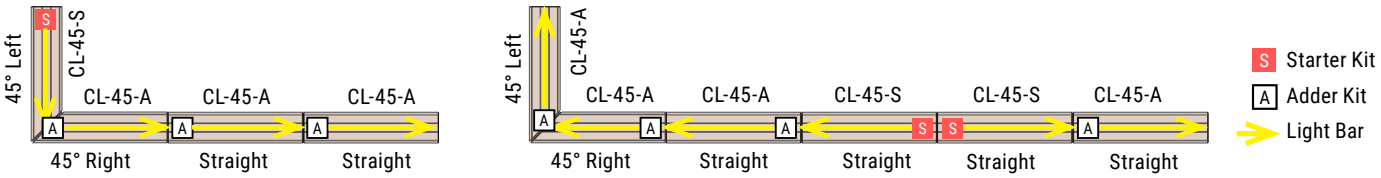

PRODUCT	DESCRIPTION	LENGTH	INCLUDES 96W DRIVER	WATTAGE	LUMENS	LED LENGTH	PRICE, EA.
CL-90-S	Camino Lighting, Straight, Starter Kit	82"	x	20.5	1934	81	1100.00
CL-90-A	Camino Lighting, Straight, Adder Kit	82"		20.5	1934	81	870.00
CL-60-S	Camino Lighting, 60°, Starter Kit	76"	x	19	1792	77	1100.00
CL-60-A	Camino Lighting, 60°, Adder Kit	76"		19	1792	77	870.00
CL-45-S	Camino Lighting, 45°, Starter Kit	72"	x	18	1698	71	1100.00
CL-45-A	Camino Lighting, 45°, Adder Kit	72"		18	1698	71	870.00
CL-45B-S	Camino Lighting, 45° Both, Starter Kit	61"	x	15.3	1439	61	1100.00
CL-45B-A	Camino Lighting, 45° Both, Adder Kit	61"		15.3	1439	61	870.00
CL-60B-S	Camino Lighting, 60° Both, Starter Kit	71"	x	17.8	1674	71	1100.00
CL-60B-A	Camino Lighting, 60° Both, Adder Kit	71"		17.8	1674	71	870.00

Prices listed do not include tax or freight; for a complete quote, submit a quote request by visiting Tournesol.com/requestquote. Pricing effective Oct.29.26.

Montara Seating



Montara Linear Benches



Montara Platforms

Pair with Montara planters on page 24 or Montara Water Features on page 67. Pricing shown based on Thermally Modified Wood.

PRODUCT	DESCRIPTION	LENGTH	WIDTH	HEIGHT	WEIGHT (LBS)	GFRC
MAB-3600	Montara Platform	36" L	36" W	18" H	310	2010.00
MAB-4800	Montara Platform	48" L	48" W	18" H	465	2840.00
MAB-6000	Montara Platform	60" L	60" W	18" H	626	4020.00
MAB-7200	Montara Platform	72" L	72" W	18" H	835	5400.00
MAB-4830	Montara Linear Bench	48" L	30" W	18" H	335	2120.00
MAB-6030	Montara Linear Bench	60" L	30" W	18" H	405	2530.00
MAB-7230	Montara Linear Bench	72" L	30" W	18" H	475	2950.00
MAB-9630	Montara Linear Bench	96" L	30" W	18" H	625	3450.00
MAB-12030	Montara Linear Bench	120" L	30" W	18" H	910	5270.00
MAB-14430	Montara Linear Bench	144" L	30" W	18" H	1055	6040.00
MAB-16830	Montara Linear Bench	168" L	30" W	18" H	1200	6730.00
MAB-19230	Montara Linear Bench	192" L	30" W	18" H	1350	7510.00

Prices listed do not include tax or freight; for a complete quote, submit a quote request by visiting Tournesol.com/requestquote. Pricing effective Oct.29.26.

Paso Seating



Paso Linear Benches



Paso Circular Planter Bench



Paso Stools



Paso Platforms

Pair with coordinating Paso planters found on page 25.

Pricing shown based on Thermally Modified Wood.

PRODUCT	DESCRIPTION	LENGTH	WIDTH	HEIGHT	WEIGHT (LBS)	GFRC
PCB3970036	Paso Circular Planter Bench	-	97" Dia.	18" H / 36" H	1519	10394.00
PCB1340018	Paso Stool	-	34" Dia.	18" H	188	2204.00
PCB1460018	Paso Stool	-	46" Dia.	18" H	304	3034.00
PCB1740018	Paso Platform	-	74" Dia.	18" H	637	6099.00
PCB1970018	Paso Platform	-	97" Dia.	18" H	1149	10322.00
PCB2742818	Paso Linear Bench	74" L	28" W	18" H	376	3321.00
PCB2962818	Paso Linear Bench	96" L	28" W	18" H	488	4305.00
PCB2744018	Paso Linear Bench	74" L	40" W	18" H	455	3783.00
PCB2964018	Paso Linear Bench	96" L	40" W	18" H	590	4910.00

Prices listed do not include tax or freight; for a complete quote, submit a quote request by visiting Tournesol.com/requestquote. Pricing effective Oct.29.26.

Pebble



PRODUCT	DESCRIPTION	LENGTH	WIDTH	HEIGHT	WEIGHT	PRICE, EA.
YC-01	Small Pebble Stool, GFRC concrete	29.5”L	24.6”W	18”H	150 lbs.	827.00
YC-02	Medium Pebble Stool, GFRC concrete	41”L	29.5”W	17.75”H	200 lbs.	1040.00
YC-03	Large Pebble Stool, GFRC concrete	71”L	29.5”W	17.75”H	300 lbs.	2440.00

Prices listed do not include tax or freight; for a complete quote, submit a quote request by visiting Tournesol.com/requestquote. Pricing effective Oct.29.26.

Plaza Collection

Pair with coordinating Plaza receptacles found on pages 60..



Plaza City

PRODUCT	DESCRIPTION	LENGTH	WEIGHT	PRICE, EA.
PZ-0200-48	Plaza City Collection Steel Bench w/ Back, Surface Mount FW part no. PL-2	48"	208 lbs.	2090.00
PZ-0200-60	Plaza City Collection Steel Bench w/ Back, Surface Mount	60"	241 lbs.	2382.00
PZ-0200-72	Plaza City Collection Steel Bench w/ Back, Surface Mount	72"	274 lbs.	2714.00
PZ-0200-96	Plaza City Collection Steel Bench w/ Back, Surface Mount	96"	340 lbs.	3370.00
PZ-0220-48	Plaza City Collection Steel Bench w/ Back, Embed	48"	208 lbs.	2090.00
PZ-0220-60	Plaza City Collection Steel Bench w/ Back, Embed	60"	241 lbs.	2382.00
PZ-0220-72	Plaza City Collection Steel Bench w/ Back, Embed	72"	274 lbs.	2808.00
PZ-0220-96	Plaza City Collection Steel Bench w/ Back, Embed	96"	340 lbs.	3370.00
PZ-0400-48	Plaza City Collection Steel Backless Bench, Surface Mount, FW part no. PL-1	48"	160 lbs.	1456.00
PZ-0400-60	Plaza City Collection Steel Backless Bench, Surface Mount	60"	190 lbs.	1560.00
PZ-0400-72	Plaza City Collection Steel Backless Bench, Surface Mount	72"	223 lbs.	1737.00
PZ-0400-96	Plaza City Collection Steel Backless Bench, Surface Mount	96"	278 lbs.	2101.00
PZ-0420-48	Plaza City Collection Steel Backless Bench, Embed, FW part no. PL-1	48"	160 lbs.	1373.00
PZ-0420-60	Plaza City Collection Steel Backless Bench, Embed	60"	190 lbs.	1550.00
PZ-0420-72	Plaza City Collection Steel Backless Bench, Embed	72"	223 lbs.	1737.00
PZ-0420-96	Plaza City Collection Steel Backless Bench, Embed	96"	278 lbs.	2101.00



Plaza Town

PRODUCT	DESCRIPTION	LENGTH	WEIGHT	PRICE, EA.
PZ-01C00-48	Plaza Town Collection Steel and Cast Iron Bench w/ Back and Arms, seat, Surface Mount, FW part no. PL-5	48"	283 lbs.	2922.00
PZ-01C00-60	Plaza Town Collection Steel and Cast Iron Bench w/ Back and Arms, Surface Mount	60"	323 lbs.	3266.00
PZ-01C00-72	Plaza Town Collection Steel and Cast Iron Bench w/ Back and Arms, Surface Mount	72"	364 lbs.	3588.00
PZ-01C00-96	Plaza Town Collection Steel and Cast Iron Bench w/ Back and Arms, Surface Mount	96"	449 lbs.	4295.00
PZ-03C00-48	Plaza Town Collection Steel and Cast Iron Backless Bench with Arms, Surface Mount, FW part no. PL-1.5	48"	230 lbs.	2517.00
PZ-03C00-60	Plaza Town Collection Steel and Cast Iron Backless Bench with Arms, Surface Mount	60"	252 lbs.	2787.00
PZ-03C00-72	Plaza Town Collection Steel and Cast Iron Backless Bench with Arms, Surface Mount	72"	275 lbs.	3026.00
PZ-03C00-96	Plaza Town Collection Steel and Cast Iron Backless Bench with Arms, Surface Mount	96"	321 lbs.	3619.00

Prices listed do not include tax or freight; for a complete quote, submit a quote request by visiting Tournesol.com/requestquote. Pricing effective Oct.29.26.

Plaza Collection

Pair with coordinating Plaza receptacles found on pages 60..



Plaza Village

PRODUCT	DESCRIPTION	LENGTH	WEIGHT	PRICE, EA.
PZ-0100-48	Plaza Village Collection Steel Bench w/ Back and Arms, Surface Mount, FW part no. PL-3	48"	213 lbs.	2049.00
PZ-0100-60	Plaza Village Collection Steel Bench w/ Back and Arms, Surface Mount	60"	248 lbs.	2309.00
PZ-0100-72	Plaza Village Collection Steel Bench w/ Back and Arms, Surface Mount	72"	291 lbs.	2538.00
PZ-0100-96	Plaza Village Collection Steel Bench w/ Back and Arms, Surface Mount	96"	360 lbs.	3068.00
PZ-0300-48	Plaza Village Collection Steel Backless Bench with arms, Surface Mount, FW part no. PL-1.3	48"	169 lbs.	1685.00
PZ-0300-60	Plaza Village Collection Steel Backless Bench with arms, Surface Mount	60"	195 lbs.	1882.00
PZ-0300-72	Plaza Village Collection Steel Backless Bench with arms, Surface Mount	72"	216 lbs.	2049.00
PZ-0300-96	Plaza Village Collection Steel Backless Bench with arms, Surface Mount	96"	298 lbs.	2486.00



Plaza Tables

PRODUCT	DESCRIPTION	LENGTH	WIDTH	PRICE, EA.
PZ-0400-30	Plaza Collection Backless Bench, Surface Mount (each) FW part no. F-7	30"L	18-1/2"W	790.00
PZ-0400-30A	Plaza Collection Backless Bench, ADA compatible, Surface Mount (each)	30"L	18-1/2"W	790.00
PZ-0420-30	Plaza Collection Backless Bench, Permanent Embed (each)	30"L	18-1/2"W	863.00
PZ-0420-30A	Plaza Collection Backless Bench, ADA compatible, Permanent Embed (each)	30"L	18-1/2"W	863.00
PZ-0400-72A	Plaza Collection Backless Bench, ADA compatible Plaza Table, Surface Mount, FW part no. F-8	72"L	18-1/2"W	1706.00
PZ-0400-72T	Plaza Collection Backless Bench, for use with Plaza Table, Surface Mount	72"L	18-1/2"W	1706.00
PZ-0420-72A	Plaza Collection Backless Bench, for use with ADA compatible Plaza Table, Embed	72"L	18-1/2"W	1706.00
PZ-0420-72T	Plaza Collection Backless Bench, for use with Plaza Table, Embed	72"L	18-1/2"W	1706.00
PZ-0400-96T	Plaza Collection Backless Bench, for use with Plaza Table, Surface Mount, FW part no. F-8	96"L	18-1/2"W	2101.00
PZ-0420-96T	Plaza Collection Backless Bench, for use with Plaza Table, Embed	96"L	18-1/2"W	2101.00
PZ-1000-3636	Plaza Collection Steel Strap Table, Surface Mount, FW part no. F-7	36"L	36"W	1768.00
PZ-1000-3636A	Plaza Collection Steel Strap Table, ADA compatible, Surface Mount	36"L	36"W	1768.00
PZ-1020-3636	Plaza Collection Steel Strap Table, Embed	36"L	36"W	1446.00
PZ-1020-3636A	Plaza Collection Steel Strap Table, ADA compatible, Embed	36"L	36"W	1446.00
PZ-1000-7238	Plaza Collection Rectangular Steel Table, Surface Mount, FW part no. F-8	72"L	38"W	3203.00
PZ-1020-7238	Plaza Collection Rectangular Steel Table, Permanent Embed	72"L	38"W	3016.00
PZ-1000-9638	Plaza Collection Rectangular Steel Table, Surface Mount, FW part no. F-8	96"L	38"W	3910.00
PZ-1000-9638A	Plaza Collection Rectangular ADA Steel Table, Surface Mount, use with 72" bench	96"L	38"W	3858.00
PZ-1020-9638	Plaza Collection Rectangular Steel Table, Permanent Embed	96"L	38"W	3754.00
PZ-1020-9638A	Plaza Collection Rectangular ADA Steel Table, Permanent Embed,use with 72" bench	96"L	38"W	3754.00

Prices listed do not include tax or freight; for a complete quote, submit a quote request by visiting Tournesol.com/requestquote. Pricing effective Oct.29.26.

Rune



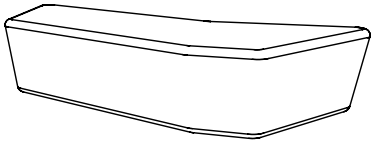

RC-01

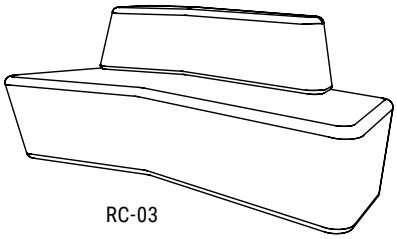

RC-03

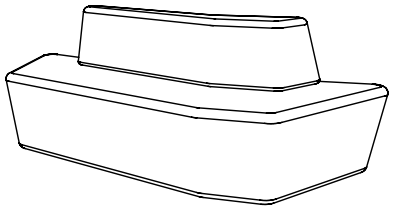

RC-02

PRODUCT	DESCRIPTION	LENGTH	WIDTH	HEIGHT	WEIGHT	PRICE, EA.
RC-01	Rune Backless Bench, GFRC	84”L	36”W	17”H	270 lbs.	2550.00
RC-02	Rune Bench, Back Type 1	84”L	36”W	30”H	360 lbs.	3060.00
RC-03	Rune Bench, Back Type 2	84”L	36”W	30”H	360 lbs.	3060.00

Prices listed do not include tax or freight; for a complete quote, submit a quote request by visiting Tournesol.com/requestquote. Pricing effective Oct.29.26.

Transit





Base price shown with Douglas Fir
Western Red Cedar - add 15% per unit
Recycled Plastic Lumber - add 10% per unit

Benches

PRODUCT	DESCRIPTION	LENGTH	PRICE, EA.
TN-02100-48	Transit Collection Wood or Rec. Plastic Bench w/ Back, Surface Mount, FW part no. T-3	48"	1456.00
TN-02100-60	Transit Collection Wood or Rec. Plastic Bench w/ Back, Surface Mount	60"	1820.00
TN-02100-72	Transit Collection Wood or Rec. Plastic Bench w/ Back, Surface Mount	72"	1986.00
TN-02100-96	Transit Collection Wood or Rec. Plastic Bench w/ Back, Surface Mount	96"	2278.00
TN-02120-48	Transit Collection Wood or Rec. Plastic Bench w/ Back, Embed, FW part no. T-3	48"	1456.00
TN-02120-60	Transit Collection Wood or Rec. Plastic Bench w/ Back, Embed	60"	1820.00
TN-02120-72	Transit Collection Wood or Rec. Plastic Bench w/ Back, Embed	72"	2278.00
TN-02120-96	Transit Collection Wood or Rec. Plastic Bench w/ Back, Embed	96"	2028.00
TN-0400-48	Transit Collection Wood or Rec. Plastic and Steel Backless Bench, Surface Mount, FW part no. T-1	48"	936.00
TN-0400-60	Transit Collection Wood or Rec. Plastic and Steel Backless Bench, Surface Mount	60"	1144.00
TN-0400-72	Transit Collection Wood or Rec. Plastic and Steel Backless Bench, Surface Mount	72"	1383.00
TN-0400-96	Transit Collection Wood or Rec. Plastic and Steel Backless Bench, Surface Mount	96"	1622.00
TN-0420-48	Transit Collection Wood or Rec. Plastic and Steel Backless Bench, Embed, FW part no. T-1	48"	936.00
TN-0420-60	Transit Collection Wood or Rec. Plastic and Steel Backless Bench, Embed	60"	1144.00
TN-0420-72	Transit Collection Wood or Rec. Plastic and Steel Backless Bench, Embed	72"	1383.00
TN-0420-96	Transit Collection Wood or Rec. Plastic and Steel Backless Bench, Embed	96"	1622.00

PART NO.	OPTIONS FOR TRANSIT BENCHES		
TN-CA	Transit Collection flat arms for backed benches (ea.)		135.00
TN-CA-T	Transit Collection tube arms for backed benches (ea.)		136.00

Prices listed do not include tax or freight; for a complete quote, submit a quote request by visiting Tournesol.com/requestquote. Pricing effective Oct.29.26.

Transit





Base price shown with Douglas Fir
Western Red Cedar - add 15% per unit
Recycled Plastic Lumber - add 10% per unit

Tables

PRODUCT	DESCRIPTION	PRICE, EA.
TN-1200-3636	Transit Collection Wood or Rec. Plastic and Steel Table w/ 36" Sq. 4x4 Top and 2 Seats, Surface Mount, 3636, FW part no. F-4	2787.00
TN-1200-3636A	Transit Collection Wood or Rec. Plastic and Steel Table w/ 36" Sq. 4x4 Top and 2 Seats, Wheelchair Access, Surface Mount	2912.00
TN-1220-3636	Transit Collection Wood or Rec. Plastic and Steel Table w/ 36" Sq. 4x4 Top and 2 Seats, Embed	2787.00
TN-1220-3636A	Transit Collection Wood or Rec. Plastic and Steel Table w/ 36" Sq. 4x4 Top and 2 Seats, Wheelchair Access, Embed	2912.00
TN-1200-4848	Transit Collection Wood or Rec. Plastic and Steel Table w/ 48" Sq. 4x4 Top and 2 Seats, Surface Mount, FW part no. F-4	3661.00
TN-1200-4848A	Transit Collection Wood or Rec. Plastic and Steel Table w/ 48" Sq. 4x4 Top and 2 Seats, Wheelchair Access, Surface Mount	3754.00
TN-1220-4848	Transit Collection Wood and Steel Table w/ 48" Sq. 4x4 Top and 2 Seats, Embed	3661.00
TN-1220-4848A	Transit Collection Wood or Rec. Plastic and Steel Table w/ 48" Sq. 4x4 Top and 2 Seats, Wheelchair Access, Embed	3754.00
TN-1200-7230	Transit Collection Wood or Rec. Plastic and Steel Table w/ 72" 4x4 Top and 2 Seats, Surface Mount, Tier 2, FW part no. F-5	3526.00
TN-1200-7230A	Transit Collection Wood or Rec. Plastic and Steel Table w/72" 4x4 Top and 2 - 72" Benches (Wheelchair Access.), Surface Mount	4118.00
TN-1220-7230	Transit Collection Wood or Rec. Plastic and Steel Table w/ 72" 4x4 Top and 2 Seats, Embed	3526.00
TN-1220-7230A	Transit Collection Wood or Rec. Plastic and Steel Table w/72" 4x4 Top and 2 - 72" Benches (Wheelchair Access.), Embed	4118.00
TN-1200-9630	Transit Collection Wood or Rec. Plastic and Steel Table w/ 96" 4x4 Top and 2 Seats, Surface Mount, Tier 2, FW part no. F-5	4014.00
TN-1220-9630	Transit Collection Wood or Rec. Plastic and Steel Table w/ 96" 4x4 Top and 2 Seats, Embed	4014.00
TN-1200-12030A	Transit Collection Wood or Rec. Plastic and Steel Table w/ 120" 4x4 Top and 2 - 96" Benches (Wheelchair Access.), Surface Mount, FW part no. F-5	4597.00
TN-1220-12030A	Transit Collection Wood or Rec. Plastic and Steel Table w/120" 4x4 Top and 2 - 96" Benches (Wheelchair Access.), Embed	4597.00

PART NO.	OPTIONS FOR TRANSIT COLLECTION	PRICE, EA.
TN-Seat	Transit Collection additional 4x4 table seat	437.00

Prices listed do not include tax or freight; for a complete quote, submit a quote request by visiting Tournesol.com/requestquote. Pricing effective Oct.29.26.

Twig Benches



G-01

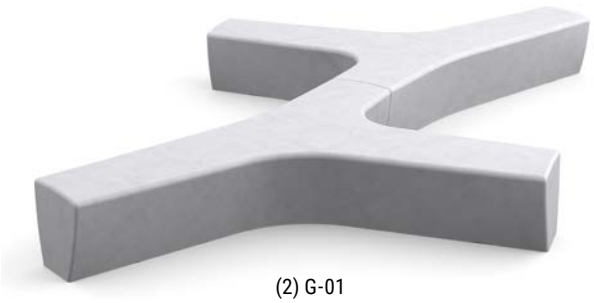

(2) G-01



G-02

PRODUCT	DESCRIPTION	OVERALL LENGTH	OVERALL WIDTH	SEAT	HEIGHT	WEIGHT	PRICE, EA.
G-01	TWIG modular seating bench lightweight GFRC concrete, acid-etch finish with sealant.	93-3/4"L	75-5/8"L	16-7/8"	17-1/2"H	approx. 550-600lbs	3693.00
G-02	Reverse TWIG modular seating bench lightweight GFRC concrete, acid-etch finish with sealant. Mirror image of original.	93-3/4"L	75-5/8"L	16-7/8"	17-1/2"H	approx. 550-600lbs	3693.00
GSS	Optional Skate Stops (7 per bench) for TWIG bench, 3" W brushed stainless steel, surface mount stop with two included SS panhead 3/8" x 3/4" screws and expansion anchors.						45.00

Prices listed do not include tax or freight; for a complete quote, submit a quote request by visiting Tournesol.com/requestquote. Pricing effective Oct.29.26.

Wally Benches



Wally A style



Wally C style

Wally “A”
Base price shown with Thermally Modified Wood
Douglas Fir - add 5% per unit
Western Red Cedar - add 15% per unit

Wally “C”
Base price shown with Douglas Fir
Western Red Cedar - add 15% per unit
Recycled Plastic Lumber - add 10% per unit

Avalable Wood Species				
Bench Series	Thermally Modified Wood	Recycled Plastic Lumber	Douglas Fir	Western Red Cedar
Wally A (LY-A30-##)	✓	---	✓	✓
Wally C (LY-C30-##)	---	✓	✓	✓

Review chart at left for material options. Pricing below in standard material. Contact an Advisor for pricing of other materials.

Note: Planters used with Wally Collection benches require additional reinforcement. Hardware not included. Check with your Advisor for details.

PRODUCT	DESCRIPTION	LENGTH	WIDTH	PRICE, EA.
LY-A30-48	Wally Collection "A" Wood and Steel Wall-hung flat bench - Thermally Modified Wood	48"L	18"W	1102.00
LY-A30-72	Wally Collection "A" Wood and Steel Wall-hung flat bench - Thermally Modified Wood	72"L	18"W	1500.00
LY-A30-96	Wally Collection "A" Wood and Steel Wall-hung flat bench - Thermally Modified Wood	96"L	18"W	1806.00
LY-C30-48	Wally Collection "C" Wood and Steel Wall-hung cascade-style bench - Douglas Fir	48"L	20"W	1377.00
LY-C30-72	Wally Collection "C" Wood and Steel Wall-hung cascade-style bench - Douglas Fir	72"L	20"W	1704.00
LY-C30-96	Wally Collection "C" Wood and Steel Wall-hung cascade-style bench - Douglas Fir	96"L	20"W	2000.00

WHEN REQUIRED MOUNTING KITS ARE NEEDED

PART NUMBER	WHEN BENCH IS MOUNTED TO:	DESCRIPTION	PRICE, EA.
LY-RE-G	Tournesol GFRC Planter	Required Mounting Kit when securing Wally benches to GFRC planters. (1) each per bench	388.00
LY-RE-ST	Tournesol Metal Planter	Required Mounting Kit when securing Wally benches to Wilshire metal planters or Kitsap metal walls. (1) each per bench	388.00
WYT	Wally Field Template	Wally Type A & C Template for locating Mounting Brackets in field.	30.00

Prices listed do not include tax or freight; for a complete quote, submit a quote request by visiting Tournesol.com/requestquote. Pricing effective Oct.29.26.

Willard Benches & Tables

Benches and tables designed to work with Wilshire and Boulevard.

Comes standard with thermally modified wood and powder-coated steel frames.



WT-721818



WT-721932



WT-724130



WT-721836



WT-721842

Modifications: Gathering Tables may be modified in length from 60” - 80”. All other Willard products may be modified in length from 36” - 108”. Check with your salesperson for details.

PRODUCT	DESCRIPTION	LENGTH	WIDTH	HEIGHT	CAPACITY	WEIGHT (LBS)	PRICE, EA.
WT-481818	Willard Backless Bench	48"L	18"W	18"H	2	88	1765.00
WT-601818	Willard Backless Bench	60"L	18"W	18"H	2	98	1908.00
WT-721818	Willard Backless Bench	72"L	18"W	18"H	3	111	2102.00
WT-961818	Willard Backless Bench	96"L	18"W	18"H	4	132	2367.00
WT-481932	Willard Bench with Back	48"L	19"W	32"H	2	111	2275.00
WT-601932	Willard Bench with Back	60"L	19"W	32"H	2	124	2448.00
WT-721932	Willard Bench with Back	72"L	19"W	32"H	3	137	2652.00
WT-961932	Willard Bench with Back	96"L	19"W	32"H	4	169	3336.00
WT-604130	Willard Table	60"L	41"W	30"H	4	200	3428.00
WT-724130	Willard Table	72"L	41"W	30"H	6	223	3744.00
WT-964130	Willard Table	96"L	41"W	30"H	8	263	4325.00
WT-481836	Willard Counter	48"L	18"W	36"H	2	116	1938.00
WT-601836	Willard Counter	60"L	18"W	36"H	2	127	2061.00
WT-721836	Willard Counter	72"L	18"W	36"H	3	140	2255.00
WT-961836	Willard Counter	96"L	18"W	36"H	4	159	2540.00
WT-481842	Willard Bar	48"L	18"W	42"H	2	125	1969.00
WT-601842	Willard Bar	60"L	18"W	42"H	2	136	2091.00
WT-721842	Willard Bar	72"L	18"W	42"H	3	149	2285.00
WT-961842	Willard Bar	96"L	18"W	42"H	4	168	2571.00
WT-JKIT	Willard Bench Joining Kit	-	-	-	-	2	30.00
WT-AKIT	Willard Bench and Table Anchoring Kit	-	-	-	-	1	20.00

Prices listed do not include tax or freight; for a complete quote, submit a quote request by visiting Tournesol.com/requestquote. Pricing effective Oct.29.26.

Tournesol



Bins & Bollards









Prices listed do not include tax or freight; for a complete quote, submit a quote request by visiting Tournesol.com/requestquote. Pricing effective Oct.29.26

Boulevard Receptacles



Pair with coordinating Boulevard Planters found on pages 11-16.

PART NO.	DESCRIPTION	DIMENSIONS	LINER SIZE	PRICE, EA.
BV-08-30	Boulevard Receptacle standard top open/top access	24" Sq.	30 gallon liner	1817.00
BV-FT	Flat top rain hood for BV-08-30 receptacle			223.00

Prices listed do not include tax or freight; for a complete quote, submit a quote request by visiting Tournesol.com/requestquote. Pricing effective Oct.29.26.

Plaza Receptacles



Pair with coordinating Plaza benches and tables found on pages 50-51.

PRODUCT	DESCRIPTION	PRICE, EA.
PZ-075-35	Plaza Steel Strap Flared Receptacle w/ 35 Gal. Black Polyethylene Liner, Open Top	1831.00
PZ-075D-35	Plaza Steel Strap Flared Receptacle with Side Door, 35 Gal. Black Polyethylene Liner, Open Top	2039.00
PZ-DDT	Dome Top for Plaza Round Receptacle with door	624.00
PZ-DFT	Flat Top for Plaza Collection Receptacle with door	375.00
PZ-HDT	Hinged Top w/ Dome for Plaza Round Receptacle	635.00
PZ-HFT	Hinged Flat Top for Plaza Round Receptacle	416.00
LVL	Leveling Feet, (set of 4)	50.00
LSD	Lock Assembly - Side Door	140.00
TDP	13"W x 10"H Side Decal Plate - No Decal	80.00
PZ-DST	Decal for Side Decal Plate – Trash	63.00
PZ-DSR	Decal for Side Decal Plate – Recycle	63.00
PZ-DTR	Decal for Top – Recycle (2ea)	63.00
PZ-DTT	Decals for Top – Trash (2ea)	62.00

Prices listed do not include tax or freight; for a complete quote, submit a quote request by visiting Tournesol.com/requestquote. Pricing effective Oct.29.26.

Tournesol Receptacles & Recyclers







Pair with coordinating Wilshire Planters found on pages 29-34.

PRODUCT	DESCRIPTION	SHAPE	LENGTH	WIDTH	HEIGHT	VOLUME	LID CONFIGURATION	PRICE, EA.
WR-REC-01	Tournesol Recycler	Square	22"L	22"W	33"H	1 liner 26 Gal.	FRP 1-Stream Lid	1220.00
WR-REC-02	Tournesol Recycler	Rectangle	38"L	22"W	33"H	2 liners 26 Gal.	FRP 2-Stream Lid	2140.00
WR-REC-03	Tournesol Recycler	Rectangle	54"L	22"W	33"H	3 liners 26 Gal.	FRP 3-Stream Lid	2920.00



Pair with coordinating Wilshire Round Planters found on page 35.

PRODUCT	DESCRIPTION	SHAPE	DIAMETER	HEIGHT	LINER	PRICE, EA.
WS-TFR	Tournesol Receptacle with FRP lid	Round	24" Dia.	30"H	20 gal. LLDPE liner	1090.00

Prices listed do not include tax or freight; for a complete quote, submit a quote request by visiting Tournesol.com/requestquote. Pricing effective Oct.29.26.

Bollards

Customize with Bollard Accessories on Page 66.

When specifying, use height in inches in place of__ (i.e., B-0200-10-3006).

B-1

PRODUCT	DESCRIPTION	HEIGHT 30"	HEIGHT 36"	HEIGHT 42"	HEIGHT 48"
B-0100-40-__04	4" Surface, sch. 40	536.00	567.00	609.00	630.00
B-0120-40-__04	4" Embed, sch. 40	494.00	546.00	735.00	788.00
B-0140-40-__04	4" Removable, sch. 40, requires 4" Receiver	536.00	557.00	588.00	620.00
B-0100-10-__06	6" Surface, sch. 10	662.00	704.00	746.00	767.00
B-0120-10-__06	6" Embed, sch. 10	609.00	641.00	683.00	714.00
B-0140-10-__06	6" Removable, sch. 10, requires 6" Receiver	599.00	651.00	662.00	693.00
B-0100-40-__06	6" Surface, sch. 40	767.00	819.00	882.00	924.00
B-0120-40-__06	6" Embed, sch. 40	767.00	819.00	882.00	935.00
B-0140-40-__06	6" Removable, sch. 40, requires 6" Receiver	756.00	798.00	861.00	914.00
B-0100-80-__06	6" Surface, sch. 80	872.00	935.00	1019.00	1103.00
B-0120-80-__06	6" Embed, sch. 80	924.00	1008.00	1082.00	1155.00
B-0140-80-__06	6" Removable, sch. 80, requires 6" Receiver	903.00	987.00	1061.00	1134.00
B-0100-188-__08	8" Surface, .188 wall	1082.00	1155.00	1208.00	1271.00
B-0120-188-__08	8" Embed, .188 wall	1040.00	1092.00	1166.00	1218.00
B-0140-188-__08	8" Removable, .188 wall, requires 8" Receiver	1019.00	1071.00	1134.00	1187.00
B-0100-40-__08	8" Surface, sch. 40	1239.00	1334.00	1743.00	1806.00
B-0120-40-__08	8" Embed, sch. 40	1617.00	1680.00	1754.00	1817.00
B-0140-40-__08	8" Removable, sch. 40, requires 8" Receiver	1586.00	1638.00	1701.00	1785.00



B-2 : Dome

PRODUCT	DESCRIPTION	HEIGHT 30"	HEIGHT 36"	HEIGHT 42"	HEIGHT 48"
B-0200-40-__04	B-2, Dome Bollard, 4" Surface, sch. 40	462.00	504.00	557.00	599.00
B-0220-40-__04	B-2, Dome Bollard, 4" Embed, sch. 40	462.00	504.00	557.00	599.00
B-0240-40-__04	B-2, Dome Bollard, 4" Removable, sch. 40, requires 4" Receiver	452.00	494.00	546.00	578.00
B-0200-10-__06	B-2, Dome Bollard, 6" Surface, sch. 10	494.00	515.00	557.00	588.00
B-0220-10-__06	B-2, Dome Bollard, 6" Embed, sch. 10	452.00	515.00	557.00	599.00
B-0240-10-__06	B-2, Dome Bollard, 6" Removable, sch. 10, requires 6" Receiver	515.00	546.00	588.00	651.00
B-0200-40-__06	B-2, Dome Bollard, 6" Surface, sch. 40	588.00	630.00	693.00	746.00
B-0220-40-__06	B-2, Dome Bollard, 6" Embed, sch. 40	578.00	630.00	683.00	735.00
B-0240-40-__06	B-2, Dome Bollard, 6", Removable, sch. 40, requires 6" Receiver	599.00	641.00	704.00	756.00
B-0200-80-__06	B-2, Dome Bollard, 6" Surface, sch. 80	683.00	756.00	840.00	903.00
B-0220-80-__06	B-2, Dome Bollard, 6" Embed, sch. 80	746.00	809.00	893.00	966.00
B-0240-80-__06	B-2, Dome Bollard, 6 Removable, sch. 80, requires 6" Receiver	756.00	840.00	903.00	966.00
B-0200-188-__08	B-2, Dome Bollard, 8" Surface, .188 wall	756.00	809.00	872.00	935.00
B-0220-188-__08	B-2, Dome Bollard, 8" Embed, .188 wall	704.00	756.00	809.00	872.00
B-0240-188-__08	B-2, Dome Bollard, 8" Removable, .188 wall, requires 8" Receiver	683.00	735.00	788.00	851.00
B-0200-40-__08	B-2, Dome Bollard, 8" Surface, sch. 40	914.00	1008.00	1092.00	1187.00
B-0220-40-__08	B-2, Dome Bollard, 8" Embed, sch. 40	945.00	1040.00	1134.00	1460.00
B-0240-40-__08	B-2, Dome Bollard, 8" Removable, sch. 40, requires 8" Receiver	924.00	1019.00	1103.00	1418.00



Prices listed do not include tax or freight; for a complete quote, submit a quote request by visiting Tournesol.com/requestquote. Pricing effective Oct.29.26.

Bollards

Customize with Bollard Accessories on Page 66.

When specifying, use height in inches in place of__ (i.e., B-0200-10-3006).

B-2 : Flat

PRODUCT	DESCRIPTION	HEIGHT 30"	HEIGHT 36"	HEIGHT 42"	HEIGHT 48"
B-02100-40-__04	B-2, Flat Bollard - 4" Surface, sch. 40	462.00	504.00	504.00	588.00
B-02120-40-__04	B-2, Flat Bollard - 4" Embed, sch. 40	462.00	504.00	504.00	588.00
B-02140-40-__04	B-2, B-2, Flat Bollard - 4" Removable, sch. 40, requires 4" Receiver	462.00	494.00	494.00	588.00
B-02100-10-__06	B-2, Flat Bollard - 6" Surface, sch. 10	483.00	515.00	515.00	588.00
B-02120-10-__06	B-2, Flat Bollard - 6" Embed, sch. 10	483.00	515.00	515.00	599.00
B-02140-10-__06	B-2, Flat Bollard - 6" Removable, sch. 10, requires 6" Receiver	504.00	546.00	546.00	641.00
B-02100-40-__06	B-2, Flat Bollard - 6" Surface, sch. 40	588.00	620.00	620.00	735.00
B-02120-40-__06	B-2, Flat Bollard - 6" Embed, sch. 40	578.00	620.00	620.00	735.00
B-02140-40-__06	B-2, Flat Bollard - 6" Removable, sch. 40, requires 6" Receiver	588.00	641.00	641.00	746.00
B-02100-80-__06	B-2, Flat Bollard - 6" Surface, sch. 80	683.00	746.00	746.00	903.00
B-02120-80-__06	B-2, Flat Bollard - 6" Embed, sch. 80	735.00	809.00	809.00	956.00
B-02140-80-__06	B-2, Flat Bollard - 6" Removable, sch. 80, requires 6" Receiver	735.00	814.00	814.00	966.00
B-02100-188-__08	B-2, Flat Bollard - 8" Surface, .188 wall	756.00	809.00	809.00	924.00
B-02120-188-__08	B-2, Flat Bollard - 8" Embed, .188 wall	693.00	746.00	746.00	872.00
B-02140-188-__08	B-2, Flat Bollard - 8" Removable, .188 wall, requires 8" Receiver	693.00	746.00	746.00	872.00
B-02100-40-__08	B-2, Flat Bollard - 8" Surface, sch. 40	903.00	998.00	998.00	1176.00
B-02120-40-__08	B-2, Flat Bollard - 8" Embed, sch. 40	935.00	1029.00	1029.00	1449.00
B-02140-40-__08	B-2, Flat Bollard - 8" Removable, sch. 40, requires 8" Receiver	956.00	1050.00	1050.00	1449.00

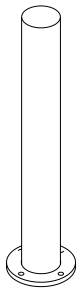

B-3 : Steel Bollards with Spherical Top and Lower Collar

PRODUCT	DESCRIPTION	HEIGHT 30"	HEIGHT 36"	HEIGHT 42"	HEIGHT 48"
B-0300-10-__06	6" Surface, sch. 10	809.00	851.00	893.00	924.00
B-0320-10-__06	6" Embed, sch. 10	746.00	777.00	809.00	861.00
B-0340-10-__06	6" Removable, sch. 10, requires 6" Receiver	746.00	767.00	809.00	851.00
B-0300-40-__06	6" Surface, sch. 40	914.00	987.00	1040.00	1092.00
B-0320-40-__06	6" Embed, sch. 40	924.00	987.00	1040.00	1092.00
B-0340-40-__06	6" Removable, sch. 40, requires 6" Receiver	914.00	966.00	1029.00	1092.00
B-0300-80-__06	6" Surface, sch. 80	1029.00	1113.00	1197.00	1271.00
B-0320-80-__06	6" Embed, sch. 80	1092.00	1187.00	1260.00	1355.00
B-0340-80-__06	6" Removable, sch. 80, requires 6" Receiver	1092.00	1166.00	1250.00	1334.00



Prices listed do not include tax or freight; for a complete quote, submit a quote request by visiting Tournesol.com/requestquote. Pricing effective Oct.29.26.

Bollards

Customize with Bollard Accessories on Page 66.

When specifying, use height in inches in place of__ (i.e., B-0200-10-3006).

B-4 : Steel Bollards with Flat Top and 2 Reveals



PRODUCT	DESCRIPTION	HEIGHT 30"	HEIGHT 36"	HEIGHT 42"	HEIGHT 48"
B-40200-10-__06	6" Surface, sch. 10	641.00	662.00	704.00	746.00
B-40220-10-__06	6" Embed, sch. 10	599.00	620.00	662.00	693.00
B-40240-10-__06	6" Removable, sch. 10, requires 4" Receiver	641.00	683.00	714.00	746.00
B-40200-40-__06	6" Surface, sch. 40	735.00	788.00	851.00	903.00
B-40220-40-__06	6" Embed, sch. 40	756.00	809.00	872.00	903.00
B-40240-40-__06	6" Removable, sch. 40, requires 4" Receiver	840.00	903.00	987.00	1029.00
B-40200-80-__06	6" Surface, sch. 80	861.00	924.00	1008.00	1082.00
B-40220-80-__06	6" Embed, sch. 80	945.00	1029.00	1103.00	1176.00
B-40240-80-__06	6" Removable, sch. 80, requires 4" Receiver	882.00	945.00	1019.00	1103.00
B-40200-188-__08	8" Surface, .188 wall	1386.00	1449.00	1512.00	1565.00
B-40220-188-__08	8" Embed, .188 wall	1323.00	1376.00	1449.00	1502.00
B-40240-188-__08	8" Removable, .188 wall, requires 6" Receiver	1397.00	1460.00	1512.00	1565.00
B-40200-40-__08	8" Surface, sch. 40	1544.00	1638.00	1869.00	1964.00
B-40220-40-__08	8" Embed, sch. 40	1586.00	1785.00	2037.00	2111.00
B-40240-40-__08	8" Removable, sch. 40, requires 6" Receiver	1785.00	1859.00	2090.00	2153.00

B-4 : Steel Bollards with Dome Top and 2 Reveals



PRODUCT	DESCRIPTION	HEIGHT 30"	HEIGHT 36"	HEIGHT 42"	HEIGHT 48"
B-41200-10-__06	6" Surface, sch. 10	704.00	735.00	767.00	798.00
B-41220-10-__06	6" Embed, sch. 10	641.00	683.00	714.00	746.00
B-41240-10-__06	6" Removable, sch. 10, requires 4" Receiver	693.00	735.00	767.00	788.00
B-41200-40-__06	6" Surface, sch. 40	788.00	851.00	893.00	956.00
B-41220-40-__06	6" Embed, sch. 40	788.00	851.00	903.00	956.00
B-41240-40-__06	6" Removable, sch. 40, requires 4" Receiver	788.00	851.00	893.00	945.00
B-41200-80-__06	6" Surface, sch. 80	882.00	956.00	1040.00	1134.00
B-41220-80-__06	6" Embed, sch. 80	987.00	1050.00	1134.00	1208.00
B-41240-80-__06	6" Removable, sch. 80, requires 4" Receiver	987.00	987.00	1061.00	1134.00
B-41200-188-__08	8" Surface, .188 wall	1397.00	1460.00	1512.00	1565.00
B-41220-188-__08	8" Embed, .188 wall	1386.00	1397.00	1460.00	1512.00
B-41240-188-__08	8" Removable, .188 wall, requires 6" Receiver	1439.00	1460.00	1533.00	1596.00
B-41200-40-__08	8" Surface, sch. 40	1523.00	1617.00	1785.00	1859.00
B-41220-40-__08	8" Embed, sch. 40	1754.00	1743.00	1964.00	2037.00
B-41240-40-__08	8" Removable, sch. 40, requires 6" Receiver	1712.00	1796.00	2016.00	2205.00

Customize with Bollard Accessories on Page 66.

Bollards

When specifying, use height in inches in place of__ (i.e., B-0200-10-3006).

B-4 : Steel Bollards with Sphere Top and 2 Reveals



PRODUCT	DESCRIPTION	HEIGHT 30"	HEIGHT 36"	HEIGHT 42"	HEIGHT 48"
B-42200-10-__06	6" Surface, sch. 10	767.00	788.00	840.00	872.00
B-42220-10-__06	6" Embed, sch. 10	746.00	777.00	798.00	851.00
B-42240-10-__06	6" Removable, sch. 10, requires 4" Receiver	777.00	809.00	851.00	882.00
B-42200-40-__06	6" Surface, sch. 40	861.00	851.00	966.00	1019.00
B-42220-40-__06	6" Embed, sch. 40	903.00	956.00	1008.00	1071.00
B-42240-40-__06	6" Removable, sch. 40, requires 4" Receiver	882.00	924.00	987.00	1040.00
B-42200-80-__06	6" Surface, sch. 80	987.00	1050.00	1134.00	1218.00
B-42220-80-__06	6" Embed, sch. 80	1082.00	1166.00	1250.00	1323.00
B-42240-80-__06	6" Removable, sch. 80, requires 4" Receiver	1008.00	1082.00	1155.00	1229.00
B-42200-188-__08	8" Surface, .188 wall	1502.00	1743.00	1806.00	1859.00
B-42220-188-__08	8" Embed, .188 wall	1617.00	1670.00	1722.00	1796.00
B-42240-188-__08	8" Removable, .188 wall, requires 6" Receiver	1670.00	1722.00	1785.00	1838.00
B-42200-40-__08	8" Surface, sch. 40	1796.00	1890.00	2132.00	2363.00
B-42220-40-__08	8" Embed, sch. 40	1827.00	2069.00	2153.00	2363.00
B-42240-40-__08	8" Removable, sch. 40, requires 6" Receiver	1869.00	2100.00	2195.00	2394.00

B-8 : Steel Bollard with Squared Reveals

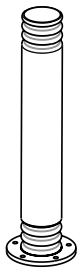

PRODUCT	DESCRIPTION	HEIGHT 30"	HEIGHT 36"	HEIGHT 42"	HEIGHT 48"
B-8000-10-__06	B-8, Squared Reveals, 6" Surface, sch. 10, FW part no. B-8A	840.00	893.00	914.00	956.00
B-8020-10-__06	B-8, Squared Reveals, 6" Embed, sch. 10	903.00	935.00	966.00	1008.00
B-8040-10-__06	B-8, Squared Reveals, 6" Removable, sch. 10, requires 6" Receiver	809.00	861.00	893.00	924.00
B-8000-40-__06	B-8, Squared Reveals, 6" Surface, sch. 40	903.00	966.00	1019.00	1082.00
B-8020-40-__06	B-8, Squared Reveals, 6" Embed, sch. 40	935.00	1008.00	1050.00	1103.00
B-8040-40-__06	B-8, Squared Reveals, 6" Removable, sch. 40, requires 6" Receiver	903.00	966.00	1019.00	1082.00
B-8000-80-__06	B-8, Squared Reveals, 6" Surface, sch. 80	998.00	1071.00	1145.00	1218.00
B-8020-80-__06	B-8, Squared Reveals, 6" Embed, sch. 80	1092.00	1166.00	1239.00	1323.00
B-8040-80-__06	B-8, Squared Reveals, 6" Removable, sch. 80, requires 6" Receiver	998.00	1071.00	1145.00	1229.00

B-8 : Steel Bollard with Rounded Reveals

PRODUCT	DESCRIPTION	HEIGHT 30"	HEIGHT 36"	HEIGHT 42"	HEIGHT 48"
B-8100-10-__06	B-8, Rounded Reveals, 6" Surface, sch. 10, FW part no. B-8B	861.00	893.00	924.00	956.00
B-8120-10-__06	B-8, Rounded Reveals, 6" Embed, sch. 10	819.00	861.00	893.00	924.00
B-8140-10-__06	B-8, Rounded Reveals, 6" Removable, sch. 10, requires 6" Receiver	851.00	882.00	903.00	935.00
B-8100-40-__06	B-8, Rounded Reveals, 6" Surface, sch. 40	924.00	987.00	1019.00	1092.00
B-8120-40-__06	B-8, Rounded Reveals, 6" Embed, sch. 40	966.00	1019.00	1082.00	1134.00
B-8140-40-__06	B-8, Rounded Reveals, 6" Removable, sch. 40, requires 6" Receiver	924.00	987.00	1040.00	1092.00
B-8100-80-__06	B-8, Rounded Reveals, 6" Surface, sch. 80	1019.00	1082.00	1166.00	1239.00
B-8120-80-__06	B-8, Rounded Reveals, 6" Embed, sch. 80	1113.00	1197.00	1260.00	1344.00
B-8140-80-__06	B-8, Rounded Reveals, 6" Removable, sch. 80, requires 6" Receiver	1019.00	1092.00	1166.00	1239.00

Prices listed do not include tax or freight; for a complete quote, submit a quote request by visiting Tournesol.com/requestquote. Pricing effective Oct.29.26.

Simple Pedestrian Bollards

PRODUCT	DESCRIPTION	PRICE, EA.
B-1320-40-3003G	Pedestrian, 3" x 30" Galvanized, Embed, Sch 40 (No Handle & Eyebolt), FW part no. SPR-E	431.00
B-1340-40-3003G	Pedestrian, 3" x 30" Galvanized, Removable, Sch 40 w/ Handle (Includes Receiver & Chain), FW part no. SPR-R	767.00
B-1320-40-3005	Vehicle Bollard, 5" x 30" Powder-Coated, Embed, Sch 40	557.00
B-1320-40-3005G	Vehicle Bollard, 5" x 30" Galvanized, Embed, Sch 40 (No Handle & Eyebolt)	599.00

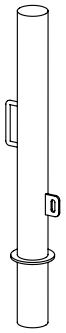

Bollard Options & Accessories

PART NO.	DESCRIPTION	WEIGHT LBS.	PRICE, EA.
B-IF	Interior Flange	0	137.00
B-LWC	Lockwell Cover	1	95.00
B-EB	Eyebolt (each)	1	53.00
B-PD	Brass Padlock	1	63.00
B-RCC4	4" Receiver Cover for removable bollard	4	95.00
B-RCC6	6" Receiver Cover for removable bollard	5	105.00
B-RCC8	8" Receiver Cover for removable bollard	6	137.00
B-REC4	4" Receiver for removable bollard	22	189.00
B-REC6	6" Receiver for removable bollard	27	200.00
B-REC8	8" Receiver for removable bollard	29	242.00
B-REV6	Additional Reveal for 6" B-4 bollards, per reveal	0	105.00
B-REV8	Additional Reveal for 8" B-4 bollards, per reveal	0	315.00
B-RIV	Decorative Rivets for B-1 Bollards (per collar) 12 rivets per bollard	1	116.00
B-RLWC	Retrofit Lockwell cover (Specify size of receiver)	1	116.00
B-TOP	Separate top for filling bollard with concrete, B-1, B-2 & B-4 bollards	-	79.00
B-MIN	Powder-coating charge for fewer than 5 bollards	0	441.00
B-HD	Welded 5" handle for bollards (each)	5	179.00
B-HGT4	Custom bollard height, 4" mild steel bollards	-	137.00
B-HGT6	Custom bollard height, 6" mild steel bollards	-	137.00
B-HGT8	Custom bollard height, 8" mild steel bollards	-	137.00
B-EXT4	Custom bollard embed depth, 4" mild steel bollards	-	294.00
B-EXT6	Custom bollard embed depth, 6" mild steel bollards	-	347.00
B-EXT8	Custom bollard embed depth, 8" mild steel bollards	-	431.00
B-ARC4	Additional collar, 4" B-1 bollard	0	210.00
B-ARC6	Additional collar, 6" B-1 bollard	0	263.00
B-ARC8	Additional collar, 8" B-1 bollard	0	294.00
B-RRC4	Removal of collar, 4" B-1 bollard	0	42.00
B-RRC6	Removal of collar, 6" B-1 bollard	0	42.00
B-RRC8	Removal of collar, 8" B-1 bollard	0	42.00
B-TAPE	Hi-Intensity Tape on bollard (see application sheet) not available for galvanized finish	-	40.00

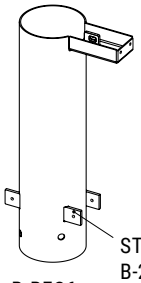

B-REC6

Prices listed do not include tax or freight; for a complete quote, submit a quote request by visiting Tournesol.com/requestquote. Pricing effective Oct.29.26.

Tournesol



Water Features



Prices listed do not include tax or freight; for a complete quote, submit a quote request by visiting Tournesol.com/requestquote. Pricing effective Oct.29.26

Montara Water Features



Montara Water Features

Pair with coordinating Montara Seating found on page 46.

PRODUCT	DESCRIPTION	LENGTH	WIDTH	HEIGHT	WEIGHT (LBS.)	WATER VOL. (GAL.)	GFRC
MAW-4848	Montara Water Feature, Single with 1 bubbler and LED lighting	48" L	48" W	24" H	550	46	3480.00
MAW-9648	Montara Water Feature, Double with 2 bubblers and LED lighting	96" L	48" W	24" H	1075	90	5900.00
MAW-14448	Montara Water Feature, Triple with 3 bubblers and LED lighting	144" L	48" W	24" H	1610	135	7590.00

Prices listed do not include tax or freight; for a complete quote, submit a quote request by visiting Tournesol.com/requestquote. Pricing effective Oct.29.26.

Tournesol

Saucers

Irrigation

Drainage

Planter Liners

Prices listed do not include tax or freight; for a complete quote, submit a quote request by visiting Tournesol.com/requestquote. Pricing effective Oct.29.26

Skirted Planter Saucers

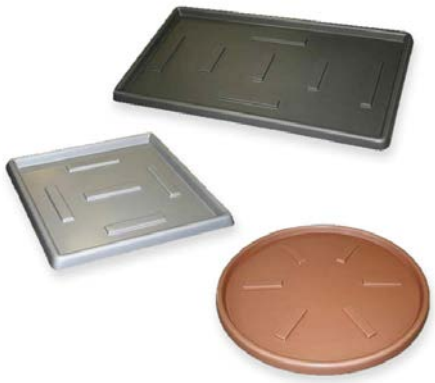

						MATERIALS	
						FRP	GFRC
PRODUCT	SHAPE	DIAMETER	LENGTH	WIDTH	HEIGHT	SL	SCL
SL/SCL-1500	Round Saucer	18.5" Dia.	-	-	1.5"H	160.00	194.00
SL/SCL-1700	Round Saucer	20.5" Dia.	-	-	1.5"H	200.00	225.00
SL/SCL-2000	Round Saucer	23.5" Dia.	-	-	1.5"H	220.00	276.00
SL/SCL-2300	Round Saucer	26.5" Dia.	-	-	1.5"H	330.00	255.00
SL/SCL-2600	Round Saucer	29.5" Dia.	-	-	1.5"H	260.00	255.00
SL/SCL-2900	Round Saucer	32" Dia.	-	-	1.5"H	330.00	296.00
SL/SCL-3300	Round Saucer	36.5" Dia.	-	-	1.5"H	490.00	459.00
SL/SCL-3800	Round Saucer	41" Dia.	-	-	1.5"H	560.00	429.00
SL/SCL-4100	Round Saucer	44" Dia.	-	-	1.5"H	590.00	653.00
SL/SCL-4500	Round Saucer	48.5" Dia.	-	-	1.5"H	680.00	582.00
SL/SCL-5700	Round Saucer	60.5" Dia.	-	-	1.5"H	1020.00	1071.00
SL/SCL-1717	Square Saucer	-	20"L	20"W	1.5"H	260.00	327.00
SL/SCL-2020	Square Saucer	-	23"L	23"W	1.5"H	400.00	347.00
SL/SCL-2525	Square Saucer	-	28"L	28"W	1.5"H	280.00	317.00
SL/SCL-3030	Square Saucer	-	33"L	33"W	1.5"H	490.00	419.00
SL/SCL-3535	Square Saucer	-	38"L	38"W	1.5"H	640.00	551.00
SL/SCL-4343	Square Saucer	-	46.5"L	46.5"W	1.5"H	930.00	663.00
SL/SCL-4747	Square Saucer	-	49.5"L	49.5"W	1.5"H	1050.00	929.00
SL/SCL-5757	Square Saucer	-	59.5"L	59.5"W	1.5"H	1420.00	1357.00
SL/SCL-2115	Rectangle Saucer	-	24.5"L	18.5"W	1.5"H	330.00	327.00
SL/SCL-3315	Rectangle Saucer	-	36.5"L	18.5"W	1.5"H	370.00	398.00
SL/SCL-4515	Rectangle Saucer	-	48.5"L	18.5"W	1.5"H	410.00	357.00
SL/SCL-5715	Rectangle Saucer	-	60.5"L	18.5"W	1.5"H	530.00	470.00
SL/SCL-2519	Rectangle Saucer	-	28.5"L	22.5"W	1.5"H	290.00	255.00
SL/SCL-3119	Rectangle Saucer	-	34"L	22.5"W	1.5"H	320.00	347.00
SL/SCL-3719	Rectangle Saucer	-	40.5"L	22.5"W	1.5"H	470.00	357.00
SL/SCL-4619	Rectangle Saucer	-	49"L	22.5"W	1.5"H	690.00	398.00
SL/SCL-4919	Rectangle Saucer	-	52.5"L	22.5"W	1.5"H	740.00	623.00
SL/SCL-5519	Rectangle Saucer	-	58"L	22.5"W	1.5"H	720.00	653.00

Prices listed do not include tax or freight; for a complete quote, submit a quote request by visiting Tournesol.com/requestquote. Pricing effective Oct.29.26.

Skirted Planter Saucers

						MATERIALS	
						FRP	GFRC
PRODUCT	SHAPE	DIAMETER	LENGTH	WIDTH	HEIGHT	SL	SCL
SL/SCL-6119	Rectangle Saucer	-	64.5"L	22.5"W	1.5"H	670.00	602.00
SL/SCL-7319	Rectangle Saucer	-	76.5"L	22.5"W	1.5"H	790.00	684.00
SL/SCL-9719	Rectangle Saucer	-	100.5"L	22.5"W	1.5"H	1100.00	888.00
SL/SCL-12119	Rectangle Saucer	-	124.5"L	22.5"W	1.5"H	1270.00	1102.00
SL/SCL-3321	Rectangle Saucer	-	36.5"L	24.5"W	1.5"H	480.00	388.00
SL/SCL-4521	Rectangle Saucer	-	48.5"L	24.5"W	1.5"H	520.00	490.00
SL/SCL-5721	Rectangle Saucer	-	60.5"L	24.5"W	1.5"H	610.00	582.00
SL/SCL-3725	Rectangle Saucer	-	40.5"L	28.5"W	1.5"H	500.00	439.00
SL/SCL-5025	Rectangle Saucer	-	53"L	28.5"W	1.5"H	600.00	592.00
SL/SCL-6125	Rectangle Saucer	-	64.5"L	28.5"W	1.5"H	820.00	714.00
SL/SCL-7325	Rectangle Saucer	-	76.5"L	28.5"W	1.5"H	1000.00	837.00
SL/SCL-9725	Rectangle Saucer	-	100.5"L	28.5"W	1.5"H	1200.00	1133.00
SL/SCL-12125	Rectangle Saucer	-	124.5"L	28.5"W	1.5"H	1220.00	1184.00
SL/SCL-3731	Rectangle Saucer	-	40.5"L	34.5"W	1.5"H	500.00	459.00
SL/SCL-4931	Rectangle Saucer	-	52.5"L	34.5"W	1.5"H	630.00	561.00
SL/SCL-6131	Rectangle Saucer	-	64.5"L	34.5"W	1.5"H	840.00	725.00
SL/SCL-7331	Rectangle Saucer	-	76.5"L	34.5"W	1.5"H	990.00	847.00
SL/SCL-9731	Rectangle Saucer	-	100.5"L	34.5"W	1.5"H	1230.00	1255.00
SL/SCL-12131	Rectangle Saucer	-	124.5"L	34.5"W	1.5"H	1340.00	1347.00

Prices listed do not include tax or freight; for a complete quote, submit a quote request by visiting Tournesol.com/requestquote. Pricing effective Oct.29.26.

Irrigation Inserts



CWC Tapered Container Irrigation

PRODUCT	DESCRIPTION	TOP	BOTTOM	HEIGHT	CAPACITY	PRICE, EA.
CWC-R1100	Tapered Square Irrigation System	12"	10.5"	13.25"H	2 gal	105.00
CWC-R1500	Tapered Square Irrigation System	17"	10"	17"H	3 gal	172.00
CWC-R1850	Tapered Square Irrigation System	19.75"	13.6"	18.25"H	5 gal	274.00
CWC-1216	Tapered Round Irrigation System	12"	7.5"	16”H	1.7 gal	108.00
CWC-1300	Tapered Round Irrigation System	14.5"	8"	13.5"H	1.2 gal	97.00
CWC-1500	Tapered Round Irrigation System	16.5"	10.5"	15"H	2.25 gal	118.00
CWC-1600	Tapered Round Irrigation System	18"	11.5"	17"H	3.2 gal	145.00
CWC-1800	Tapered Round Irrigation System	20.8"	13"	19"H	4 gal	182.00
CWC-2100	Tapered Round Irrigation System	23.3"	14.5"	21.5"H	6 gal	236.00
CWC-2400	Tapered Round Irrigation System	26"	15"	21"H	6.5 gal	312.00
CWC-2500	Tapered Round Irrigation System	27.3"	17.5"	25"H	7.5 gal	295.00

Container Irrigation Accessories

PART NO.	DESCRIPTION	SYSTEM	QTY PER PACKAGE	PRICE, PER PKG.
C_P	CWI Standard replacement sensors	Specify Specify CWI size	6	50.00
CL_P	CWI Long replacement sensors	Specify Specify CWI size	6	50.00
L_P	CWC Standard replacement sensors	Specify CWC size	6	50.00
F_P	CWF Replacement sensors	Specify CWF size	6	50.00
M_P	CWM Replacement sensors	Specify CWM size	6	50.00
S_P	Replacement sensor	Specify Natural Spring planter size	6	50.00
BG25P	BioGuard root control squares	Fits all products	25	60.00
GRP	Replacement grommets	Fits all products	12	20.00
STCWIP	CWI Replacement stoppers	Fits all CWI	12	25.00
ST6.5P	CWC & CWF Replacement stoppers	Fits all CWC & CWF	6	25.00
TSP	Tamper resistant stoppers, ea.	CWM products	1	30.00

Prices listed do not include tax or freight; for a complete quote, submit a quote request by visiting Tournesol.com/requestquote. Pricing effective Oct.29.26.

Irrigation Inserts



CWI Container Irrigation

PRODUCT	DESCRIPTION	DIAMETER	HEIGHT	CAPACITY	PRICE, EA.
CWI-1200	CWI Irrigation System	12.5" Dia.	11.25"H	1.5 gal	43.00
CWI-1400	CWI Irrigation System	15.75" Dia.	14"H	2.0 gal	65.00
CWI-1650	CWI Irrigation System	18" Dia.	16.75"H	4.0 gal	127.00
CWI-1700	CWI Irrigation System	18.25" Dia.	18.5"H	4.5 gal	140.00
CWI-2200	CWI Irrigation System	23.7" Dia.	19.75"H	8.0 gal	214.00
CWI-1200-X	CWI w/ Exterior Adapter	12.5" Dia	11.2"H	1.5 gal	55.00
CWI-1400-X	CWI w/ Exterior Adapter	5.75" Dia	14"H	2.0 gal	70.00
CWI-1650-X	CWI w/ Exterior Adapter	18" Dia.	16.75"H	4.0 gal	140.00
CWI-1700-X	CWI w/ Exterior Adapter	18.5" Dia.	18.5"H	4.5 gal	150.00
CWI-2200-X	CWI w/ Exterior Adapter	23.7" Dia.	19.7"H	8.0 gal	231.00

Prices listed do not include tax or freight; for a complete quote, submit a quote request by visiting Tournesol.com/requestquote. Pricing effective Oct.29.26.

CWM Modular Container Irrigation

CWM Container Irrigation Modules are typically sold as complete systems. Each system includes one fill module, one sensor module, and enough secondary modules. Systems include tubing, hose clamps, an overflow drainage adapter, and sealant. CWM Solo Modules are sold complete - assembly of fill tube is still required.



CWM Curved Back

PRODUCT	DESCRIPTION	WIDTH	HEIGHT	DEPTH	RADIUS	PRICE, EA.
CWM-1109-MS	Solo module w/Curved Back	11"W	9"H	7.5"D	9"	118.00
CWM-1109-2K	2-module CWM System w/Curved Back	11"W	9"H	7.5"D	9"	317.00
CWM-1109-3K	3-module CWM System w/Curved Back	11"W	9"H	7.5"D	9"	419.00
CWM-1109-4K	4-module CWM System w/Curved Back	11"W	9"H	7.5"D	9"	531.00
CWM-1114-MS	Solo module w/Curved Back	11"W	14"H	7.5"D	9"	129.00
CWM-1114-2K	2-module CWM System w/Curved Back	11"W	14"H	7.5"D	9"	338.00
CWM-1114-3K	3-module CWM System w/Curved Back	11"W	14"H	7.5"D	9"	450.00
CWM-1114-4K	4-module CWM System w/Curved Back	11"W	14"H	7.5"D	9"	510.00
CWM-1120-MS	Solo module w/Curved Back	11"W	20"H	7.5"D	9"	156.00
CWM-1120-2K	2-module CWM System w/Curved Back	11"W	20"H	7.5"D	9"	338.00
CWM-1120-3K	3-module CWM System w/Curved Back	11"W	20"H	7.5"D	9"	450.00
CWM-1120-4K	4-module CWM System w/Curved Back	11"W	20"H	7.5"D	9"	510.00
CWM-1714-MS	Solo module w/Curved Back	17"W	14"H	10.9"D	15"	194.00
CWM-1714-2K	2-module CWM System w/Curved Back	17"W	14"H	10.9"D	15"	424.00
CWM-1714-3K	3-module CWM System w/Curved Back	17"W	14"H	10.9"D	15"	585.00
CWM-1714-4K	4-module CWM System w/Curved Back	17"W	14"H	10.9"D	15"	756.00
CWM-1714-5K	5-module CWM System w/Curved Back	17"W	14"H	10.9"D	15"	901.00
CWM-1720-MS	Solo module w/Curved Back	17"W	20"H	11.6"D	15"	225.00
CWM-1720-2K	2-module CWM System w/Curved Back	17"W	20"H	11.6"D	15"	450.00
CWM-1720-3K	3-module CWM System w/Curved Back	17"W	20"H	11.6"D	15"	605.00
CWM-1720-4K	4-module CWM System w/Curved Back	17"W	20"H	11.6"D	15"	772.00
CWM-1720-5K	5-module CWM System w/Curved Back	17"W	20"H	11.6"D	15"	906.00
CWM-2920-MS	Solo module w/Curved Back	29"W	20"H	18.5"D	26"	306.00
CWM-2920-2K	2-module CWM System w/Curved Back	29"W	20"H	18.5"D	26"	552.00
CWM-2920-3K	3-module CWM System w/Curved Back	29"W	20"H	18.5"D	26"	832.00
CWM-2920-4K	4-module CWM System w/Curved Back	29"W	20"H	18.5"D	26"	976.00
CWM-2920-5K	5-module CWM System w/Curved Back	29"W	20"H	18.5"D	26"	1185.00
CWM-2920-5KE	5-module CWM System w/Curved Back & Extension module	29"W	20"H	18.5"D	26"	1282.00

Prices listed do not include tax or freight; for a complete quote, submit a quote request by visiting Tournesol.com/requestquote. Pricing effective Oct.29.26.

CWM Modular Container Irrigation

CWM Container Irrigation Modules are typically sold as complete systems. Each system includes one fill module, one sensor module, and enough secondary modules. Systems include tubing, hose clamps, an overflow drainage adapter, and sealant. CWM Solo Modules are sold complete - assembly of fill tube is still required.

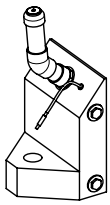

CWM-R1114-MS

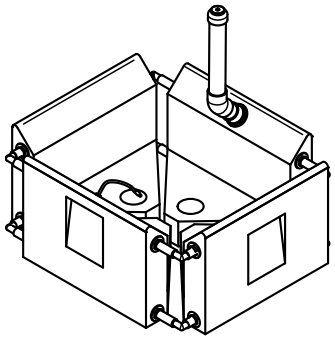

CWM-R2014-4K-CRT

CWM Flat Back

PRODUCT	DESCRIPTION	WIDTH	HEIGHT	DEPTH	CAPACITY	PRICE, EA.
CWM-R1109-MS	Solo module w/Square Back	11"W	9"H	8.75"D	1.3 Gal.	124.00
CWM-R1109-2K	2-module CWM System w/Square Back	11"W	9"H	8.75"D	2.6 Gal.	371.00
CWM-R1109-3K	3-module CWM System w/Square Back	11"W	9"H	8.75"D	3.9 Gal.	456.00
CWM-R1109-4K	4-module CWM System w/Square Back	11"W	9"H	8.75"D	5.2 Gal.	574.00
CWM-R1109-5K	5-module CWM System w/Square Back	11"W	9"H	8.75"D	6.5 Gal.	697.00
CWM-R1114-MS	Solo module w/Square Back	11"W	14"H	8.75"D	1.8 Gal.	140.00
CWM-R1114-2K	2-module CWM System w/Square Back	11"W	14"H	8.75"D	3.6 Gal.	376.00
CWM-R1114-3K	3-module CWM System w/Square Back	11"W	14"H	8.75"D	5.4 Gal.	478.00
CWM-R1114-4K	4-module CWM System w/Square Back	11"W	14"H	8.75"D	7.2 Gal.	600.00
CWM-R1114-5K	5-module CWM System w/Square Back	11"W	14"H	8.75"D	9.0 Gal.	725.00
CWM-R1120-MS	Solo module w/Square Back	11"W	20"H	8.75"D	2.5 Gal.	167.00
CWM-R1120-2K	2-module CWM System w/Square Back	11"W	20"H	8.75"D	5.0 Gal.	386.00
CWM-R1120-3K	3-module CWM System w/Square Back	11"W	20"H	8.75"D	7.5 Gal.	493.00
CWM-R1120-4K	4-module CWM System w/Square Back	11"W	20"H	8.75"D	10.0 Gal.	623.00
CWM-R1120-5K	5-module CWM System w/Square Back	11"W	20"H	8.75"D	12.5 Gal.	725.00
CWM-R1614-MS	Solo module w/Square Back	16"W	14"H	12.8"D	3.25 Gal.	210.00
CWM-R1614-2K	2-module CWM System w/Square Back	16"W	14"H	10.5"D	6.5 Gal.	414.00
CWM-R1614-3K	3-module CWM System w/Square Back	16"W	14"H	10.5"D	9.5 Gal.	574.00
CWM-R1614-4K	4-module CWM System w/Square Back	16"W	14"H	10.5"D	13.5 Gal.	707.00
CWM-R1614-5K	5-module CWM System w/Square Back	16"W	14"H	10.5"D	16.0 Gal.	885.00
CWM-R1620-MS	Solo module w/Square Back	16"W	20"H	10.5"D	4.5 Gal.	236.00
CWM-R1620-2K	2-module CWM System w/Square Back	16"W	20"H	10.5"D	9.0 Gal.	419.00
CWM-R1620-3K	3-module CWM System w/Square Back	16"W	20"H	10.5"D	13.5 Gal.	585.00
CWM-R1620-4K	4-module CWM System w/Square Back	16"W	20"H	10.5"D	18.0 Gal.	707.00
CWM-R1620-5K	5-module CWM System w/Square Back	16"W	20"H	10.5"D	22.5 Gal.	885.00
CWM-R2014-MS	Solo module w/Square Back	20"W	14"H	12.9"D	4.5 Gal.	258.00
CWM-R2014-2K	2-module CWM System w/Square Back	20"W	14"H	12.9"D	9.0 Gal.	488.00
CWM-R2014-3K	3-module CWM System w/Square Back	20"W	14"H	12.9"D	13.5 Gal.	692.00
CWM-R2014-4K	4-module CWM System w/Square Back	20"W	14"H	12.9"D	18.0 Gal.	832.00
CWM-R2014-5K	5-module CWM System w/Square Back	20"W	14"H	12.9"D	22.5 Gal.	1003.00
CWM-R2020-MS	Solo module w/Square Back	20"W	20"H	12.9"D	5.75 Gal.	279.00
CWM-R2020-2K	2-module CWM System w/Square Back	20"W	20"H	12.9"D	11.5 Gal.	516.00

Prices listed do not include tax or freight; for a complete quote, submit a quote request by visiting Tournesol.com/requestquote. Pricing effective Oct.29.26.

CWM Modular Container Irrigation

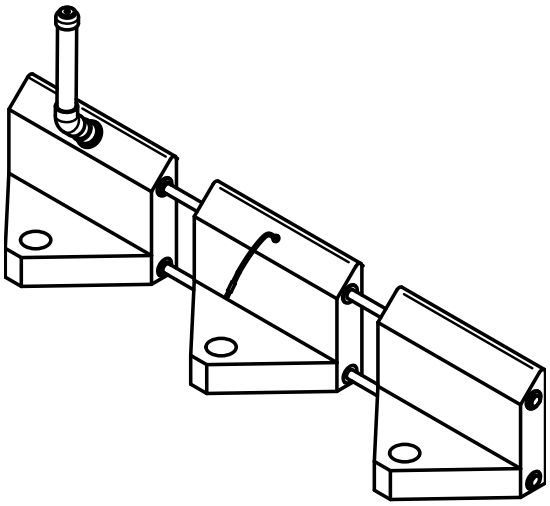

CWM-R1114-3K-LIN

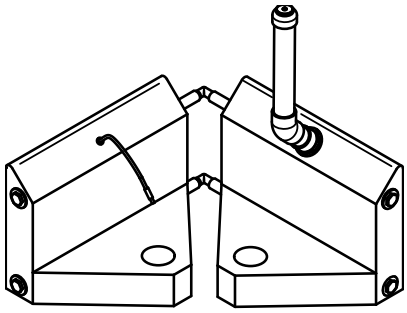

CWM-R2014-2K-ADJ

CWM Flat Back

PRODUCT	DESCRIPTION	WIDTH	HEIGHT	DEPTH	CAPACITY	PRICE, EA.
CWM-R2020-3K	3-module CWM System w/Square Back	20"W	20"H	12.9"D	17.5 Gal.	718.00
CWM-R2020-4K	4-module CWM System w/Square Back	20"W	20"H	12.9"D	23.0 Gal.	809.00
CWM-R2020-5K	5-module CWM System w/Square Back	20"W	20"H	12.9"D	28.75 Gal.	1073.00
CWM-R2914-MS	Solo module w/Square Back	29"W	14"H	18.5"D	8.5 Gal.	284.00
CWM-R2914-2K	2-module CWM System w/Square Back	29"W	14"H	18.5"D	17.0 Gal.	541.00
CWM-R2914-3K	3-module CWM System w/Square Back	29"W	14"H	18.5"D	25.5 Gal.	789.00
CWM-R2914-4K	4-module CWM System w/Square Back	29"W	14"H	18.5"D	34.0 Gal.	1008.00
CWM-R2914-5KE	5-module CWM System w/Square Back, Extension module	29"W	14"H	18.5"D	44.5 Gal.	1468.00
CWM-R2920-MS	Solo module w/Square Back	29"W	20"H	18.5"D	10.4 Gal.	319.00
CWM-R2920-2K	2-module CWM System w/Square Back	29"W	20"H	18.5"D	20.8 Gal.	652.00
CWM-R2920-3K	3-module CWM System w/Square Back	29"W	20"H	18.5"D	31.2 Gal.	899.00
CWM-R2920-4K	4-module CWM System w/Square Back	29"W	20"H	18.5"D	41.6 Gal.	1164.00
CWM-R2920-5K	5-module CWM System w/Square Back	29"W	20"H	18.5"D	52.0 Gal.	1318.00
CWM-R2920-5KE	5-module CWM System w/Square Back, Extension module	29"W	20"H	18.5"D	54.0 Gal.	1542.00
CWM-E2400	24" CWM Extension Module for all CWM systems	24"W	20"H	18.5"D	50.5 Gal.	172.00

Prices listed do not include tax or freight; for a complete quote, submit a quote request by visiting Tournesol.com/requestquote. Pricing effective Oct.29.26.

Drainage Control Products & Adapters

Our drainage control products can be used to pump out planters where no drainage can be tolerated, provide overflow for excess water, and control drainage in many applications. Designed to integrate with most Tournesol irrigation and pots, also used well with other planters.

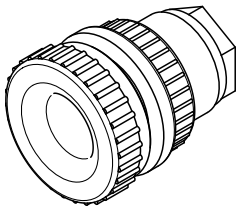

TA-075

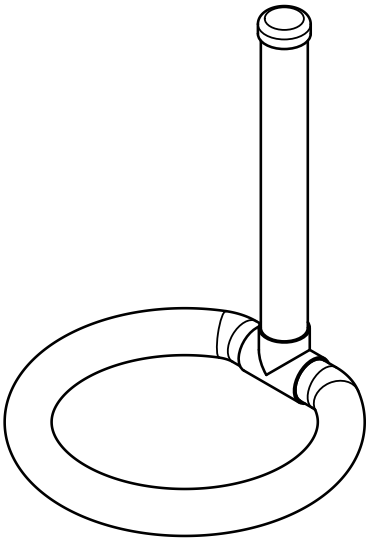

DR1-2

PART NO.	DESCRIPTION	PLANTER	PRICE, EA.
DR1-1	Drainage System 1, includes pump-out tube, T and sleeve (no pipe loop)		77.00
DR1-2	Drainage System 1, includes pump-out tube, drainage pipe and sleeve	2' pots	109.00
DR1-3	Drainage System 1, includes pump-out tube, drainage pipe and sleeve	3' pots	120.00
DR1-4	Drainage System 1, includes pump-out tube, drainage pipe and sleeve	4' pots	174.00
DR1-5	Drainage System 1, includes pump-out tube, drainage pipe and sleeve	5' and 6' pots	206.00
DR3-36	Drainage System 3, for linear planters	36" linear planters	87.00
DR3-48	Drainage System 3, for linear planters,	48" linear planters	87.00
DR3-60	Drainage System 3, for linear planters	60" linear planters	98.00
DR3-72	Drainage System 3, for linear planters	72" linear planters	109.00
DR3-96	Drainage System 3, for linear planters	96" linear planters	120.00
DR3-120	Drainage System 3, for linear planters	120" linear planters	142.00
DA-3	1-1/2" overflow drainage adapter assembly for CWM		20.00
TA-050	1/2" slip x thread double-gasketed drainage adapter		50.00
TA-075	3/4" slip x thread double-gasketed drainage adapter		55.00
TA-100	1" slip x thread double-gasketed drainage adapter		60.00
TA-150	1-1/2" slip x thread double-gasketed drainage adapter		70.00

Prices listed do not include tax or freight; for a complete quote, submit a quote request by visiting Tournesol.com/requestquote. Pricing effective Oct.29.26.

Drainage



VersiCell

PRODUCT	DESCRIPTION	DIMENSIONS	THICKNESS	PRICE, EA.
EVC-20	VersiCell Drainage Module. Rigid, square drainage sheet (2.69 sq ft)	19-5/8" Sq.	3/4"H (20mm H)	8.55
EVC-30	VersiCell Drainage Module. Rigid, square drainage sheet (2.69 sq ft)	19-5/8" Sq.	1-3/16"H (30mm H)	8.55

Custom Planter Liners

Our custom leakproof liners are welded together from stress-relieved polypropylene sheets which don't rust, corrode, or rot over time.

Available in unique sizes, shapes, and configurations in small quantities without expensive tooling or engineering costs.

Talk to one of our sales team members to discuss which materials will best suit your next liner project!



Additional Information

Please visit our website to find additional information, or reach out to an Advisor for assistance.

Materials & Finishes

https://tournesol.com/materials

Lead Times

https://tournesol.com/lead-time

Terms & Conditions

https://tournesol.com/terms

Warranty

https://tournesol.com/warranty

Prices listed do not include tax or freight; for a complete quote, submit a quote request by visiting Tournesol.com/requestquote. Pricing effective Oct.29.26.